03 - 2017
TL064DZ
12V Max CXT Angle Impact Driver

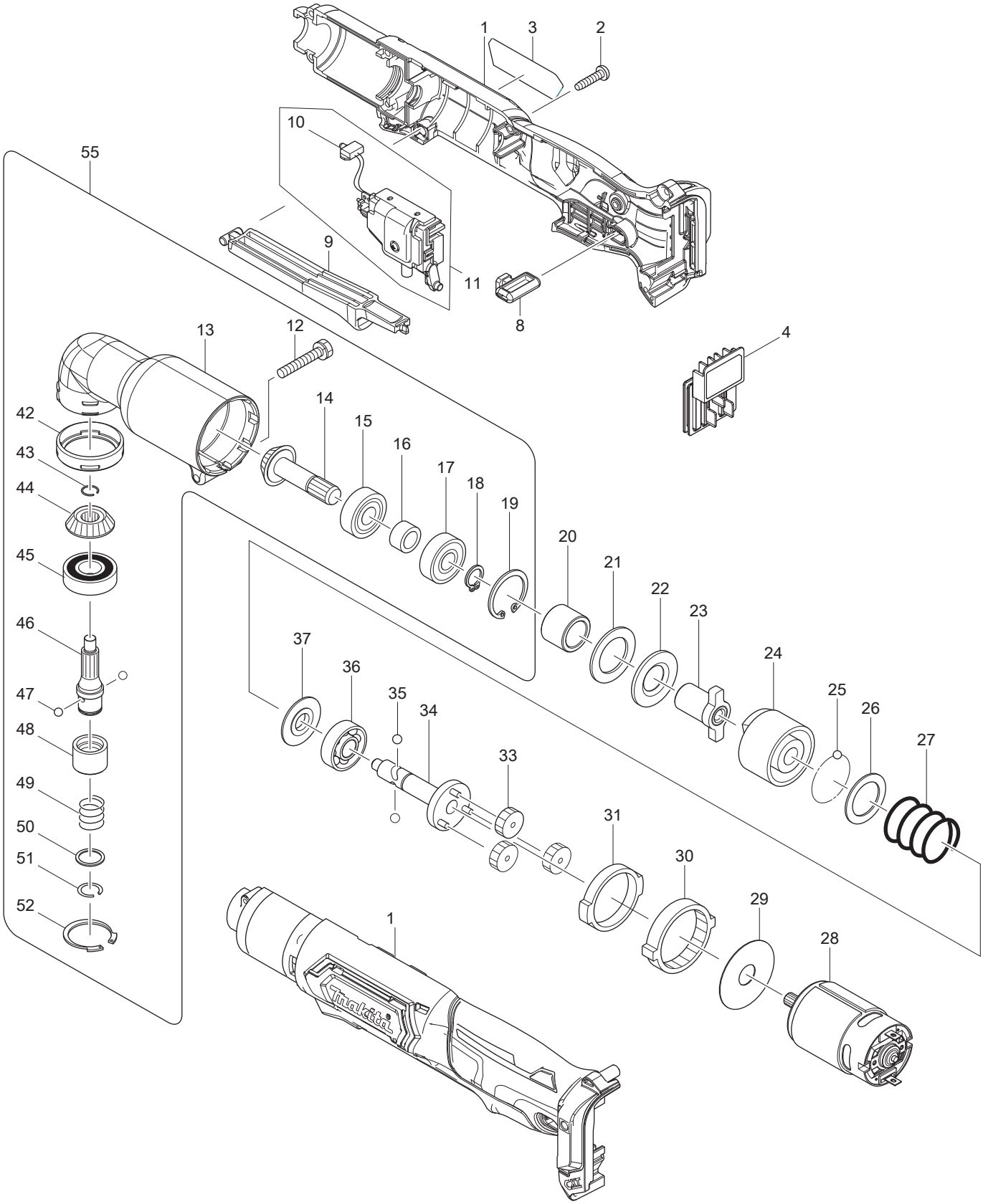

Item	Type	Sub	Part No	Description	Qty	Unit
001			183H08-8	HOUSING SET	1	Set
		INC.	252126-6	HEX LOCKING NUT M4-7	2	PC.
		INC.	812T86-0	CAUTION LABEL	1	PC.
002			266130-9	TAP SCREW BIND PT M3X16	8	PC.
003			853G86-3	NAME PLATE F/TL064D	1	PC.
004			644813-5	TERMINAL	1	PC.
008			450126-2	CHANGE LEVER F/R	1	PC.
009			450125-4	SWITCH LEVER	1	PC.
010			620690-9	LED CIRCUIT	1	PC.
011			632K58-3	SWITCH UNIT	1	PC.
		INC.		Item No. 10		
012			265409-5	+ HEX HEAD BOLT M5X30	1	PC.
013			152461-1	ANGLE HEAD COMPLETE	1	PC.
014			226720-0	ZEROL BEVEL GEAR 13	1	PC.
015			210067-2	BALL BEARING 6000ZZ	1	PC.
016			257428-5	SLEEVE 10	1	PC.
017			210067-2	BALL BEARING 6000ZZ	1	PC.
018			961006-2	RETAINING RING S-10	1	PC.
019			962105-3	RETAINING RING R-26	1	PC.
020			257429-3	SLEEVE 15	1	PC.
021			261095-0	RUBBER WASHER 21	1	PC.
022			267120-5	FLAT WASHER 15	1	PC.
023			322689-7	ANVIL	1	PC.
024			322688-9	HAMMER	1	PC.
025			216001-0	STEEL BALL 3.5	22	PC.
026			267121-3	FLAT WASHER 20	1	PC.
027			233107-9	COMPRESSION SPRING 22	1	PC.
028			629271-6	DC MOTOR	1	PC.
029			267053-4	FLAT WASHER 12	1	PC.
030			226280-2	INTERNAL GEAR 69	1	PC.
031			257187-1	RING 32	1	PC.
033			226279-7	SPUR GEAR 29	3	PC.
034			154416-2	SPINDLE COMPLETE	1	PC.
035			216002-8	STEEL BALL 4.8	2	PC.
036			211472-6	BALL BEARING 6000	1	PC.
037			322719-4	WASHER 10	1	PC.
042			424044-0	RUBBER RING 32	1	PC.
043			231990-8	RING SPRING 9	1	PC.
044			226721-8	ZEROL BEVEL GEAR 13	1	PC.
045			211131-2	BALL BEARING 6001DDW	1	PC.
046			323922-0	SPINDLE N	1	PC.
047			216001-0	STEEL BALL 3.5	2	PC.
048			326997-8	SLEEVE	1	PC.
049			233005-7	COMPRESSION SPRING 13	1	PC.
050			267085-1	FLAT WASHER 12	1	PC.
051			231951-8	RING SPRING 11	1	PC.
052			962116-8	RETAINING RING R-28	1	PC.
055			135892-9	ANGLE HEAD ASSY	1	PC.
		INC.		Item No. 12-19,42-52		
100			266622-8	+ TRUSS HEAD SCREW M4X12 F/HOOK	1	PC.
ACCESSORIES			**- See Catalogue or visit www.makita.ca for more accessories -**			
A02			346909-5	HOOK F/12V LI-ION SLIDE BATERY	1	PC.
A03			784202-3	PHILLIPS BIT 2-45	1	PC.
A04			---------	LI-ION BATTERY ACCESSORIES		
A05			DC10SB	RAPID CHARGER DC10SB	1	PC.
A06			---------	12V MAX LI-ION BATTERY, SLIDE TYPE		
A07			---------	INTERLOCKING TOOL CASES & FOAM		
A08			---------	INTERLOCKING THERMAL COOLER CASES		
A09			TR00000002	TROLLEY FOR INTERLOCKING TOOL CASES	1	PC.