05 - 2014
LS0815FL
8-1/2" SLIDE COMPOUND MITRESAW

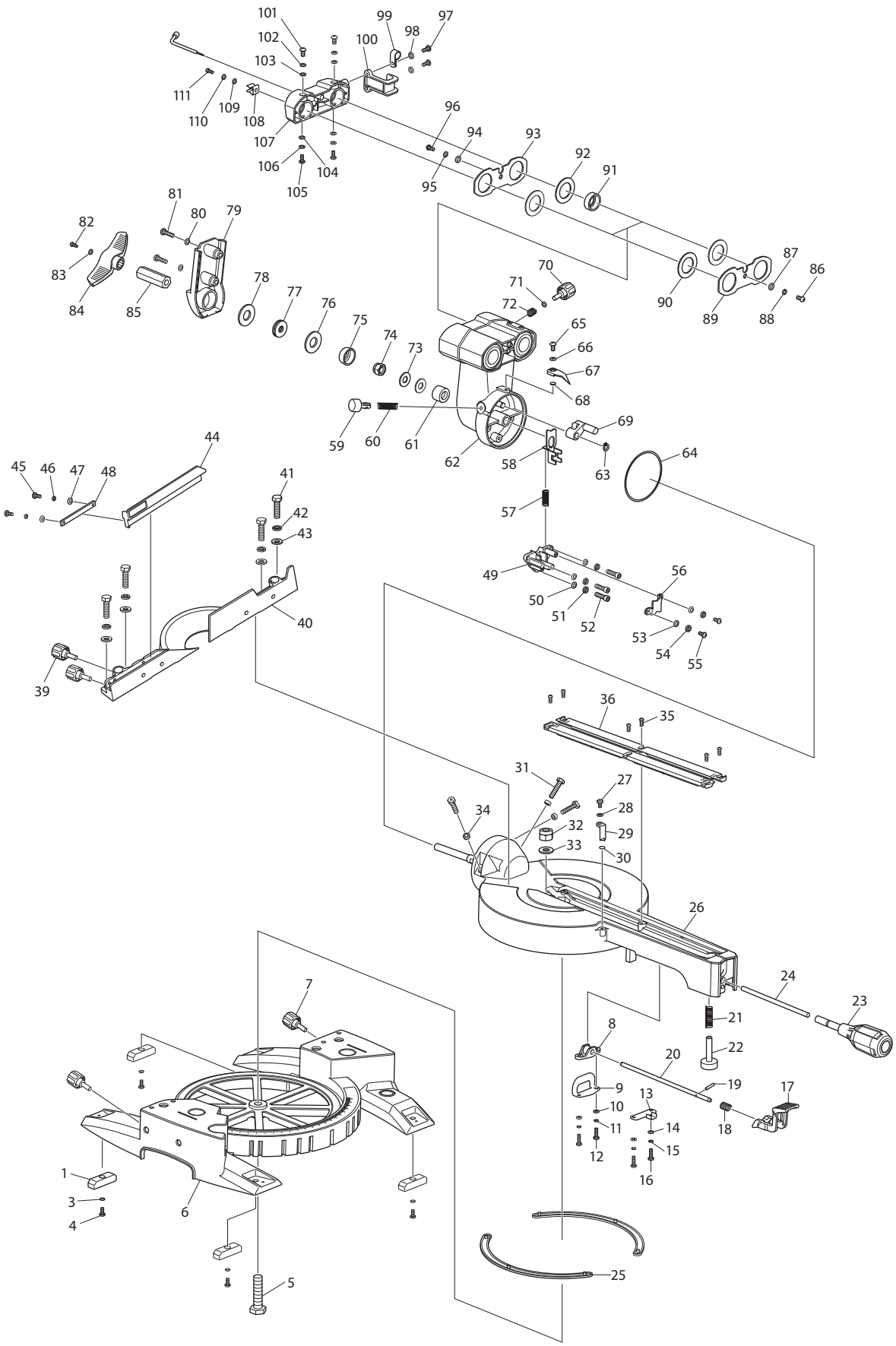

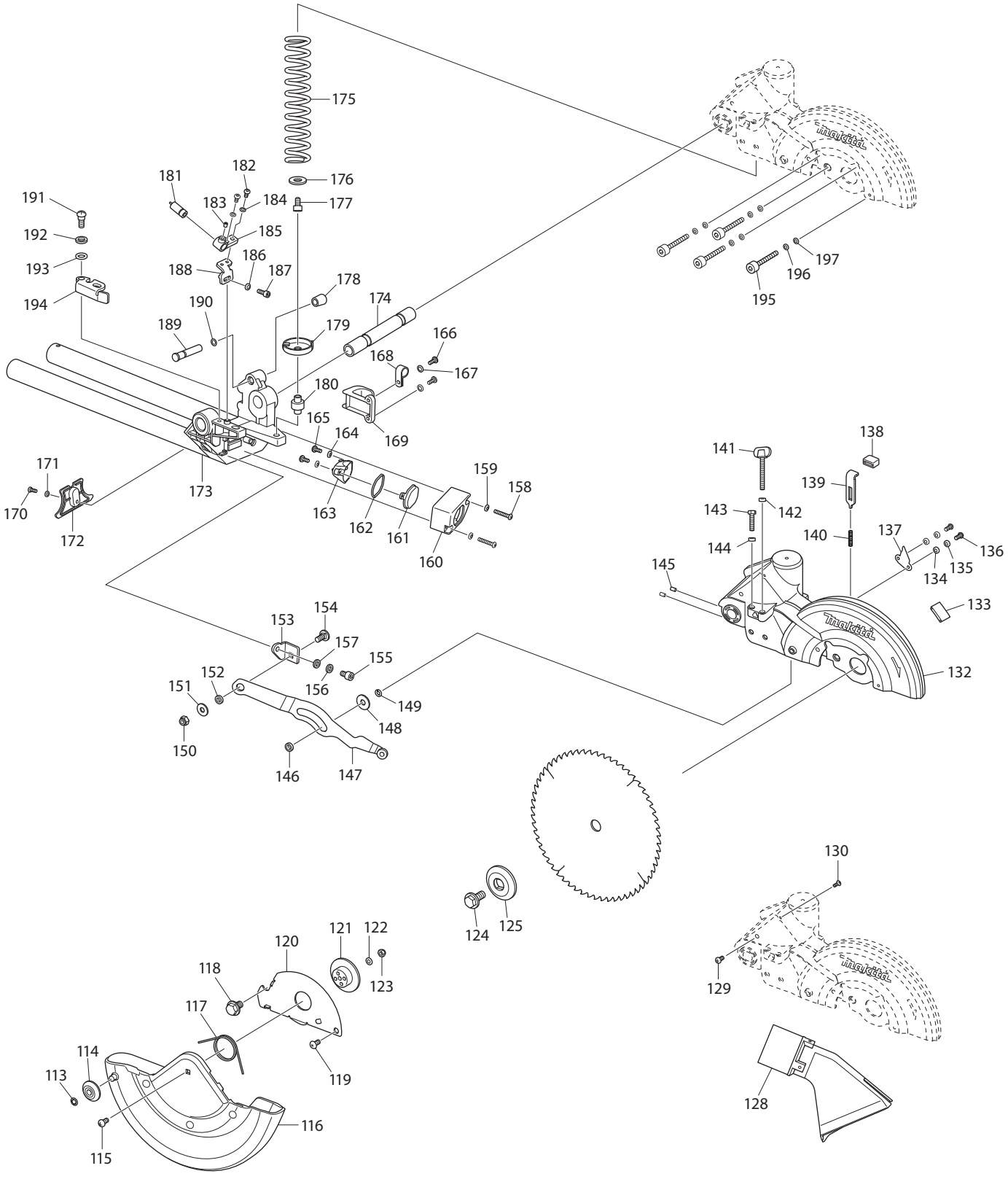
175
176
177
178
179
180
181
182
183
184
185
186
187
188
189
190
191
192
193
194
195
196
197
165
164
166
167
168
169
174
173
171
170
172
163
162
161
160
159
158
138
141
139
143
142
140
144
137
136
135
134
145
133
132
153
154
157
155
156
152
151
149
148
150
146
147
124
125
130
129
128
121
122
120
118
123
117
119
114
113
116
115

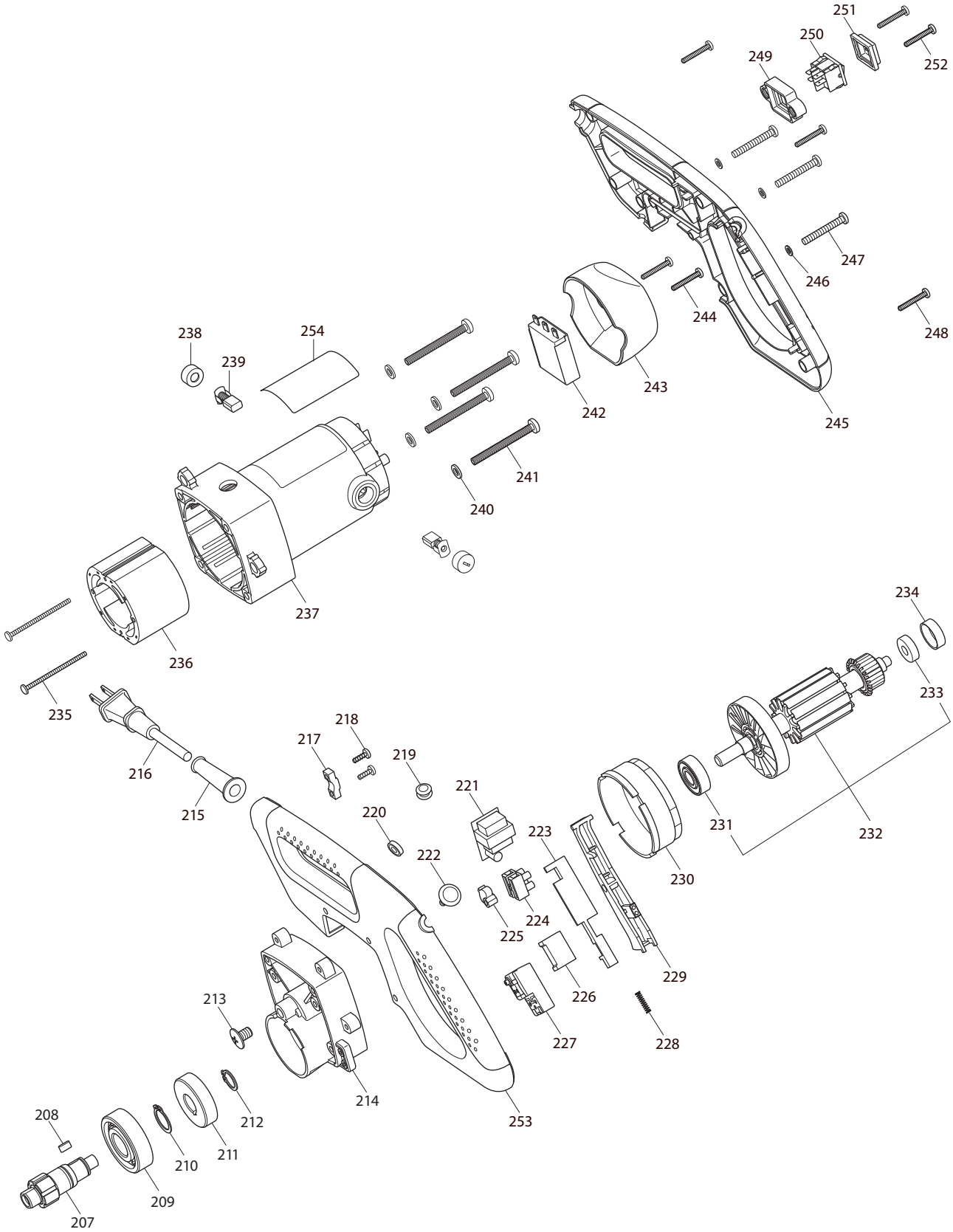

MODEL LS0815FL 3

Item No	Type	Sub	Part No	Description	Qty	Unit
001			JM23500132	BUFFER PAD	4	PC.
003			JM23100016	FLAT WASHER 4	4	PC.
004			JM23500008	CROSS HEAD SCREW M4X10	4	PC.
005			JM23500009	PIVOT SHAFT	1	PC.
006			JM23510014	BASE COMPLETE	1	PC.
		INC.	JM23500010	MITER SCALE LABEL	1	PC.
		INC.	JM2708A060	CAUTION LABEL	2	PC.
		INC.	JM2318B063	CAUTION LABEL	1	PC.
		INC.	JM2318A064	CAUTION LABEL	1	PC.
007			JM23100013	KNOB FOR EXT. WING	2	PC.
008			JM23100025	WORKING TABLE LOCKING BRACKET	1	PC.
009			JM23100020	LOCK PLATE B	1	PC.
010			JM23100016	FLAT WASHER 4	2	PC.
011			JM23100015	SPRING WASHER 4	2	PC.
012	2		JM23100033	CROSS HEAD SCREW M4X12	2	PC.
013			JM23100018	LOCK PLATE A	1	PC.
014			JM23100016	FLAT WASHER 4	2	PC.
015			JM23100015	SPRING WASHER 4	2	PC.
016	2		JM23100033	CROSS HEAD SCREW M4X12	2	PC.
017			JM23100023	PRESS PLATE	1	PC.
018			JM23100021	LOCK SPRING	1	PC.
019			JM23100022	LOCK PIN	1	PC.
020			JM23500015	LOCK SHAFT B	1	PC.
021			JM23500014	SPRING 11	1	PC.
022			JM23500013	ADJUSTABLE ROD	1	PC.
023			JM23100027	MITER LOCKING HANDLE	1	PC.
024			JM23500016	LOCK SHAFT A	1	PC.
025			JM23500012	FRICTION PLATE	2	PC.
026			JM23510017	WORKING TABLE COMPLETE	1	PC.
		INC.	JM23500017	BEVEL SCALE LABEL	1	PC.
		INC.	JM23500018	LOCKING ROD	1	PC.
		INC.	JM23500020	ELASTIC PIN 4X30	1	PC.
		INC.	JM23500021	HEX NUT M10	1	PC.
		INC.	JM23180067	CAUTION LABEL	1	PC.
027			JM23500008	CROSS HEAD SCREW M4X10	1	PC.
028			JM23100016	FLAT WASHER 4	1	PC.
029			JM23100030	MITER POINTER	1	PC.
030			JM23500053	OUT STAR WASHER	1	PC.
031			JM23100034	HEX BOLT M6X28	3	PC.
032			JM23500023	LOCKNUT M8	1	PC.
033			JM23500022	FLAT WASHER 8	1	PC.
034			JM23100035	ANTI-LOOSEN RING	3	PC.
035			JM23500008	CROSS HEAD SCREW M4X10	6	PC.
036			JM23100029	TABLE INSERT	2	PC.
039			JM23100013	KNOB FOR EXT. WING	2	PC.
040			JM23500026	RIP FENCE	1	PC.
041			JM23100062	HEX BOLT M8X30	4	PC.
042			JM23100061	SPRING WASHER 8	4	PC.
043			JM23100060	FLAT WASHER 8	4	PC.
044			JM23500025	SUB FENCE	1	PC.
045			JM23100065	CROSS HEAD SCREW M4X8	2	PC.
046			JM23100015	SPRING WASHER 4	2	PC.
047			JM23100016	FLAT WASHER 4	2	PC.
048			JM23500024	KEY	1	PC.
049			JM23500095	45 DEGREE LIMIT BRACKET	1	PC.
050			JM23100007	FLAT WASHER 5	3	PC.

Item No	Type	Sub	Part No	Description	Qty	Unit
051			JM23100149	SPRING WASHER 5	3	PC.
052			JM23500096	H.S. BOLT M5X14	3	PC.
053			JM23100016	FLAT WASHER 4	2	PC.
054			JM23100015	SPRING WASHER 4	2	PC.
055			JM23500008	CROSS HEAD SCREW M4X10	2	PC.
056			JM23500097	45 DEGREE COVER	1	PC.
057			JM23500094	SPRING 8	1	PC.
058			JM23500093	45 DEGREE LIMIT PLATE	1	PC.
059			JM23100051	LIMITED KNOB	1	PC.
060			JM23100049	MITER PRESSION SPRING	1	PC.
061			JM23100052	CLAMP PLATE	1	PC.
062			JM23510008	SUPPORT ARM COMPLTE	1	PC.
		INC.	JM23100087	LOCK SCREW M6X8	2	PC.
		INC.	JM23500089	LINEAR BEARING	3	PC.
		INC.	JM23100081	BUFFER	2	PC.
		INC.	JM23500091	ANGLE LIMIT	1	PC.
		INC.	JM23500092	BEARING GASKET	1	PC.
063			JM23500079	RETAINING RING 8	1	PC.
064			JM23500078	FRICTION RING	1	PC.
065	2		JM23100033	CROSS HEAD SCREW M4X12	2	PC.
066			JM23100016	FLAT WASHER 4	1	PC.
067			JM23100048	BEVEL POINTER	1	PC.
068			JM23500053	OUT STAR WASHER	1	PC.
069			JM23500080	90 DEGREE LIMIT BRACKET	1	PC.
070			JM23100086	SLIDING BAR LOCKING KNOB	1	PC.
071			JM23100190	SPECIAL WASHER 6	1	PC.
072			JM23100088	PRESSURE SPRING	1	PC.
073			JM23100010	FLAT WASHER 10	2	PC.
074			JM23100009	LOCKNUT M10	1	PC.
075			JM23100053	BOWL TYPE PLATE	1	PC.
076			JM23100055	BIG FLAT WASHER 10X26X2.5	1	PC.
077			JM23100054	SURFACE BEARING	1	PC.
078			JM23100055	BIG FLAT WASHER 10X26X2.5	1	PC.
079			JM23500086	SUPPORT ARM COVER	1	PC.
080			JM23100007	FLAT WASHER 5	2	PC.
081			JM23100006	CROSS HEAD SCREW M5X20	2	PC.
082			JM23100019	CROSS HEAD SCREW M4X18	1	PC.
083			JM23100016	FLAT WASHER 4	1	PC.
084			JM23500087	BEVEL LOCKING HANDLE	1	PC.
085			JM23500088	HEX NUT	1	PC.
086			JM23500081	CROSS HEAD SCREW M5X	1	PC.
087			JM23100007	FLAT WASHER 5	1	PC.
088			JM23100149	SPRING WASHER 5	1	PC.
089			JM23500082	SUPPORT ARM COVER	1	PC.
090			JM23500083	DUSTPROOF RING	2	PC.
091			JM23500084	BEARING GASKET	1	PC.
092			JM23500083	DUSTPROOF RING	2	PC.
093			JM23500082	SUPPORT ARM COVER	1	PC.
094			JM23100007	FLAT WASHER 5	1	PC.
095			JM23100149	SPRING WASHER 5	1	PC.
096			JM23500081	CROSS HEAD SCREW M5X	1	PC.
097			JM23100019	CROSS HEAD SCREW M4X18	2	PC.
098			JM23100016	FLAT WASHER 4	2	PC.
099	2		JM23100194	CORD CLAMP	1	PC.
100			JM23500066	CABLE HOLDER BRACKET	1	PC.
101			JM23500081	CROSS HEAD SCREW M5X	2	PC.
102			JM23100149	SPRING WASHER 5	2	PC.

Item No	Type	Sub	Part No	Description	Qty	Unit
103			JM23100007	FLAT WASHER 5	2	PC.
104			JM23100007	FLAT WASHER 5	2	PC.
105			JM23500081	CROSS HEAD SCREW M5X	2	PC.
106			JM23100149	SPRING WASHER 5	2	PC.
107			JM23500085	SLIDING BAR BRACKET	1	PC.
108			JM23100091	WRENCH CLIP	1	PC.
109			JM23100016	FLAT WASHER 4	1	PC.
110			JM23100015	SPRING WASHER 4	1	PC.
111	2		JM23100033	CROSS HEAD SCREW M4X12	2	PC.
113			JM23100103	WHEEL LOCK RING	1	PC.
114			JM23100102	GUARD WHEEL	1	PC.
115			JM23500031	SQUARE NECK BOLT M5X12	1	PC.
116	1		JM23510004	LOW BLADE GUARD COM	1	PC.
	2		JM23510024	LOW BLADE GUARD COM	1	PC.
117			JM23500035	GUARD SPRING	1	PC.
118			JM23500134	HEX BOLT M8X15	1	PC.
119			JM23100113	CROSSHEAD SCREW FOR GUARD	1	PC.
120			JM23500036	LOW GUARD FIX PLATE	1	PC.
121			JM23500037	GUARD LINKAGE CENTER PLATE	1	PC.
122			JM23100007	FLAT WASHER 5	1	PC.
123			JM23100141	LOCKNUT M5	1	PC.
124			JM23500135	BLADE BOLT	1	PC.
125			JM23500038	BLADE FLANGE	2	PC.
128			JM23500039	DUST PORT	1	PC.
129	2		JM23500040	CROSS HEAD SCREW ST4.2x12	1	PC.
130	2		JM23500040	CROSS HEAD SCREW ST4.2x12	1	PC.
132			JM23510005	UPPER BLADE GUARD COMPLETE	1	PC.
		INC.	JM23100114	LINK PIN	1	PC.
		INC.	JM23100147	BUFFER	1	PC.
133			JM23500047	GUARD INSERT	1	PC.
134			JM23100016	FLAT WASHER 4	2	PC.
135			JM23100015	SPRING WASHER 4	2	PC.
136	2		JM23100033	CROSS HEAD SCREW M4X12	2	PC.
137			JM23500048	LOCK PLATE	1	PC.
138			JM23100138	LOCK COVER	1	PC.
139	2		JM23500139	LOCK PLATE	1	PC.
140			JM23500049	LOCK SPRING 5	1	PC.
141			JM23100119	LIMITED KNOB	1	PC.
142			JM23100035	ANTI-LOOSEN RING	1	PC.
143			JM23500051	HEX BOLT M6X25	1	PC.
144			JM23100035	ANTI-LOOSEN RING	1	PC.
145			JM23500052	H.S. SET SCREW	2	PC.
146			JM23100098	LINK SLEEVE	1	PC.
147			JM23510003	LINK COMPLETE	1	PC.
		INC.	JM23500029	LINK PIN	1	PC.
		INC.	JM23500030	BEARING 695Z	1	PC.
148			JM23100071	THIN FLAT WASHER 6	1	PC.
149			JM23100115	RETAINING RING 5	1	PC.
150			JM23500027	LOCK THIN NUT	1	PC.
151			JM23100071	THIN FLAT WASHER 6	1	PC.
152			JM23100098	LINK SLEEVE	1	PC.
153			JM23500055	LINK FIX PLATE	1	PC.
154			JM23500054	SQUARE NECK BOLT M6X14	1	PC.
155			JM23500071	H.S. BOLT M6X12	1	PC.
156			JM23100151	SPRING WASHER 6	1	PC.
157			JM23100190	SPECIAL WASHER 6	1	PC.
158			JM23500056	CROSS HEAD SCREW M4X28	2	PC.

Item No	Type	Sub	Part No	Description	Qty	Unit
159			JM23100016	FLAT WASHER 4	2	PC.
160			JM23500057	LAMP COVER	1	PC.
161			JM23500058	LAMP LENS	1	PC.
162			JM23500059	SEALING RING	1	PC.
163			JM23510006	LAMP ASSY	1	PC.
		INC.	JM23500060	REFLECTOR	1	PC.
		INC.	JM23500061	LIGHT	1	PC.
164			JM23500128	FLAT WASHER 3	2	PC.
165			JM23500062	S.T. CROSS HEAD SCREW 9X13	2	PC.
166			JM23100019	CROSS HEAD SCREW M4X18	2	PC.
167			JM23100016	FLAT WASHER 4	2	PC.
168	2		JM23100194	CORD CLAMP	1	PC.
169			JM23500066	CABLE HOLDER BRACKET	1	PC.
170			JM23500008	CROSS HEAD SCREW M4X10	1	PC.
171			JM23100016	FLAT WASHER 4	1	PC.
172			JM23500077	BRACKET BACK COVER	1	PC.
173			JM23510020	UPPER BLADE GUARD BRACKET COMPLETE	1	PC.
		INC.	JM23500074	SILDING BAR - N/A as individually	2	PC.
		INC.	JM23500075	ELASTIC PIN 5	2	PC.
174			JM23500064	CONNECTION SHAFT	1	PC.
175			JM23500072	SPRING32	1	PC.
176			JM23500022	FLAT WASHER 8	1	PC.
177			JM23500071	H.S. BOLT M6X12	1	PC.
178			JM23100097	PIN CAP	1	PC.
179			JM23500065	SPRING BRACKET	1	PC.
180			JM23500063	SPRING SUPPORT PIN	1	PC.
181			JM23500070	LASER	1	PC.
182			JM23500068	H.S. BOLT M4X8	2	PC.
183			JM23500069	H.S. SET SCREW	1	PC.
184			JM23100016	FLAT WASHER 4	2	PC.
185			JM23500067	LASER BRACKET	1	PC.
186			JM23100016	FLAT WASHER 4	1	PC.
187			JM23100067	H.S. BOLT M4X12	1	PC.
188			JM23500073	LASER MOVING PLATE	1	PC.
189	2		JM23100193	PIN C	1	PC.
190			JM23100150	SEALING RING	1	PC.
191			JM23100096	DEPTH ADJUSTABLE PLATE BOLT	1	PC.
192			JM23100060	FLAT WASHER 8	1	PC.
193			JM23100094	WAVE SPRING WASHER	1	PC.
194			JM23100092	CUTTING DEPTH ADJUSTABLE PLATE	1	PC.
195			JM23500041	H.S. BOLT M6X40	4	PC.
196			JM23100151	SPRING WASHER 6	4	PC.
197			JM23100190	SPECIAL WASHER 6	4	PC.
207			JM23500103	OUTPUT SHAFT	1	PC.
208			JM23100156	KEY 5X10	1	PC.
209			JM23100157	BEARING 6304	1	PC.
210			JM23100158	RETAINING RING 20	1	PC.
211			JM23500104	GEAR WHEEL	1	PC.
212			JM23100160	RETAINING RING 16	1	PC.
213			JM23100161	OUTPUT SHAFT SCREW M8X12	1	PC.
214			JM23510011	GEAR BOX COMPLETE	1	PC.
		INC.	JM23100162	BUSH	1	PC.
215	2		JM23100195	PROTECTION TUBE	1	PC.
216			JM23000163	CORD W/PLUG 2P-14-2.8M	1	PC.
217			JM23100166	CORD CLAMP	1	PC.
218	2		JM23500040	CROSS HEAD SCREW ST4.2x12	2	PC.
219			JM23500108	PROTECTIVE SLEEVE	1	PC.

Item No	Type	Sub	Part No	Description	Qty	Unit
221			JM23500106	TRANSFORMER	1	PC.
222			JM23100177	BRAKE SYSTEM SWITCH KEY	1	PC.
223			JM23100175	SWITCH LOCK PLATE	1	PC.
224			JM23100171	TERMINAL POLE	1	PC.
225			JM23100173	SWITCH LOCK BRACKET	1	PC.
226			JM23100169	CAPACITOR	1	PC.
227			JM23100179	ELECTRIC SWITCH	1	PC.
228			JM23100176	SWITCH HANDLE SPRING	1	PC.
229			JM23100174	SWITCH HANDLE	1	PC.
230			JM23500110	BAFFLER RING	1	PC.
231			JM23500137	BALL BEARING 6201-2RS	1	PC.
232			JM23500003	ARMATURE (120V)	1	PC.
		INC.		Item No. 231, 233		
233			JM23500111	BEARING 608	1	PC.
234			JM23500112	DAMPING RING	1	PC.
235			JM23500113	S.T. CROSS HEAD 4.2X65	2	PC.
236			JM23500006	FIELD 120V	1	PC.
237			JM23510022	MOTOR HOUSING COMPLETE	1	PC.
		INC.	JM23500115	BRUSH HOLDER	2	PC.
		INC.	JM23100185	H.S. SCREW M5X8	2	PC.
		INC.	JM23180061	CAUTION LABEL	1	PC.
		INC.	JM23180062	CAUTION LABEL	1	PC.
238			JM23500116	BRUSH COVER	2	PC.
239			JM23500117	CARBON BRUSH 2PC/SET	1	SET
240			JM23100190	SPECIAL WASHER 6	4	PC.
241			JM23500118	CROSS HEAD SCREW M6X60	4	PC.
242	2		JM23500138	SOFT STARTER	1	PC.
243			JM23500119	MOTOR REAR COVER	1	PC.
244			JM23100167	SELF TAPPING SCREW M4X16	2	PC.
245			JM23500121	RIGHT HANDLE	1	PC.
246			JM23100007	FLAT WASHER 5	3	PC.
247			JM23500123	CROSS HEAD SCREW M5X40	3	PC.
248			JM23100167	SELF TAPPING SCREW M4X16	3	PC.
249			JM23500124	SWITCH BRACKET	1	PC.
250			JM23500125	LASER SWITCH	1	PC.
251			JM23500126	LASER SWITCH PROTECTIVE COVER	1	PC.
252			JM23500120	ST CROSS HEAD SCREW 4.2X28	2	PC.
253			JM23500107	LEFT HANDLE	1	PC.
254			JM23580018	NAME PLATE F/LS0815FL	1	PC.
C01			JM23580035	CARTON F/LS0815FL	1	PC.
ACCESSORIES						
A01			JM23000127	HOLDER	2	PC.
A02			A-95934	8-1/2" C.T. SAW BLADE 48T 5/8"	1	PC.
A03			JM23510009	VERTICAL VISE ASSEMBLY	1	PC.
		INC.	JM23500098	GUIDE ROD	1	PC.
		INC.	JM23100152	WING KNOB M6X10	1	PC.
		INC.	JM23500099	CLAMP KNOB	1	PC.
		INC.	JM27000218	LINK	1	PC.
		INC.	JM27000219	PLATE	1	PC.
		INC.	JM23100065	CROSS HEAD SCREW M4X8	1	PC.
		INC.	JM23100016	FLAT WASHER 4	1	PC.
		INC.	JM23100015	SPRING WASHER 4	1	PC.
A04			JM23510010	DUST BAG ASSY	1	PC.
		INC.	JM23500101	DUST BAG CLAMP	1	PC.
A05			JM27000328	TRIANGLE PLATE	1	PC.

Item No	Type	Sub	Part No	Description	Qty	Unit
A06	2		JM23100197	BOX WRENCH 13-3	1	PC.
A07	1		194061-1	BENCHTOP MITER SAW STAND B (Parts Breakdown Available)	1	PC.
	2		198688-9	BENCHTOP MITER SAW STAND B	1	PC.
A08			WST05	MITRE SAW STAND SET (See Parts Breakdown WST05)	1	PC.
A09			WST06	MITRE SAW STAND SET (See Parts Breakdown WST06)	1	PC.
A10			198687-1	MITRE SAW STAND SET WST01	1	PC.