makita®

08 - 2010
GA7050
7” GRINDER AC/DC

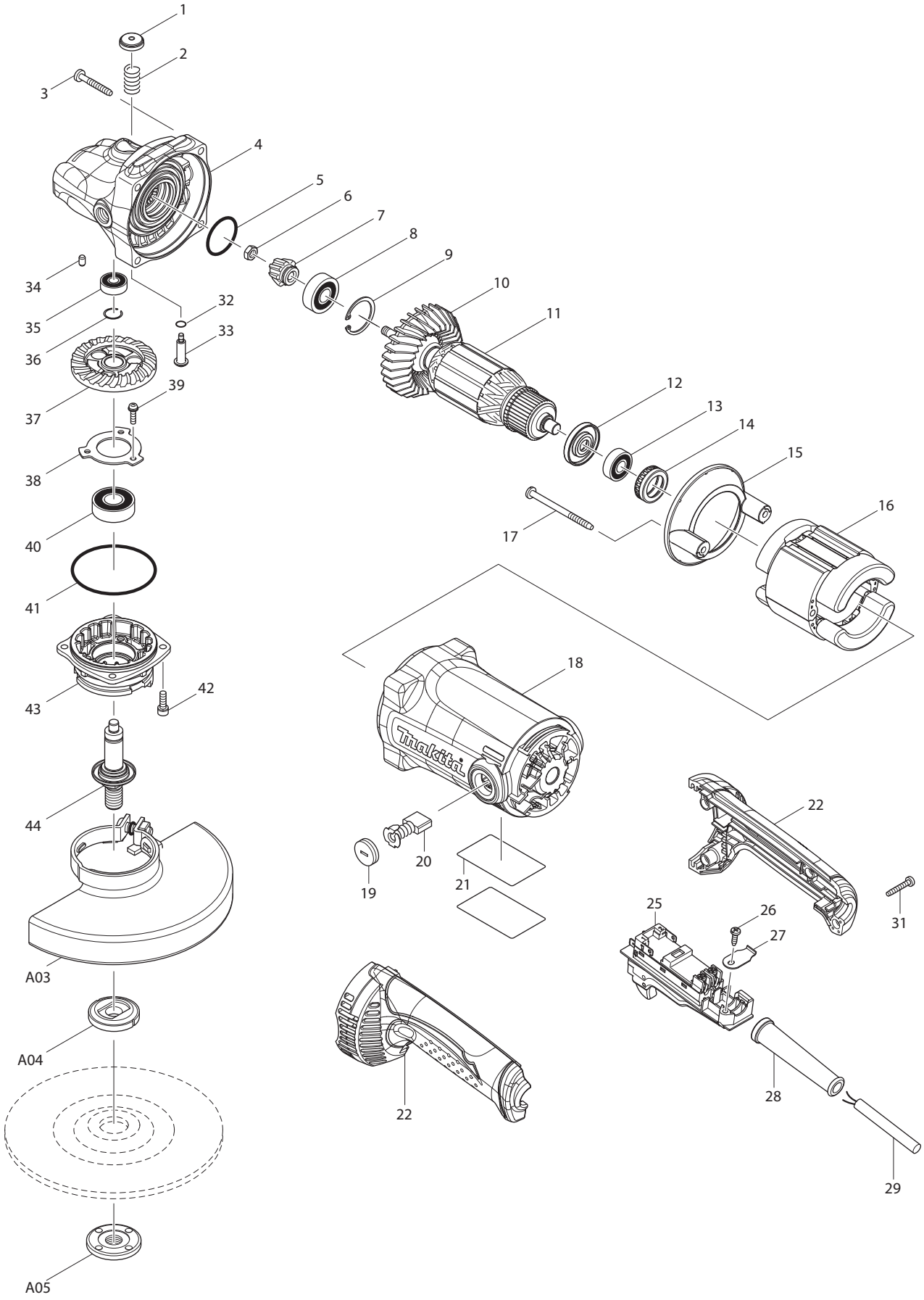

Item No	Type	Ref	Part No		Description	Qty	Unit
1			451485-7		PIN CAP	1	PC.
2			233292-8		COMPRESSION SPRING 12	1	PC.
3			266373-3		TAPPING SCREW 5X35	4	PC.
4			140223-9	*	GEAR HOUSING COMPLETE	1	PC.
		INC.	262153-5	*	FELT RING 16	1	PC.
			143016-3	*	GEAR HOUSING COMPLETE	1	PC.
		INC.	262153-5	*	FELT RING 16	1	PC.
5			213487-9		O RING 31	1	PC.
6			264010-3		HEX.NUT M7	1	PC.
7			227564-1		SPIRAL BEVEL GEAR 10A	1	PC.
8			211137-0		BALL BEARING 6201LLU	1	PC.
9			257965-9		RETAINING RING (INT) R-32	1	PC.
10			240120-0		FAN 80	1	PC.
11			518746-9		ARMATURE ASSEMBLY 115V	1	PC.
		INC.			Item No. 10,12,13		
12			681657-2		INSULATION WASHER	1	PC.
13			210059-1		BALL BEARING 6000DDW	1	PC.
14			421490-8		RUBBER RING 26	1	PC.
15			451480-7		BAFFLE PLATE	1	PC.
16			523411-7		FIELD ASSEMBLY 115V	1	PC.
		INC.	654098-5		RECEPTACLE	2	PC.
17	1		266389-8		TAPPING SCREW 5X70	2	PC.
	2		266038-7		TAPPING SCREW 5X70	2	PC.
18			140514-8		MOTOR HOUSING COMPLETE	1	PC.
		INC.	643707-1		BRUSH HOLDER	2	PC.
		INC.	810341-4		CAUTION LABEL	1	PC.
19			643700-5		BRUSH HOLDER CAP 7-18	2	PC.
20			194992-4		CARBON BRUSH CB-204	1	PC.
21			867553-0		GA7050 NAME PLATE	1	PC.
22			188848-1		HANDLE SET	1	PC.
		INC.	423404-3		SPONGE SHEET	1	PC.
25	1		650101-0		SWITCH TG08-1100-011 LOCK ON	1	PC.
	2		650106-0		SWITCH TG08-1300-013 LOCK ON/OFF	1	PC.
26			266385-6		TAPPING SCREW 4X14	1	PC.
27			687169-3		STRAIN RELIEF	1	PC.
28			682574-9		CORD GUARD 10-90	1	PC.
29			664463-0		CORD W/PLUG 2P-14-2.5M, SJ	1	PC.
31			266374-1		TAPPING SCREW 4X25	4	PC.
32			213026-5		O RING 7	1	PC.
33			256516-5		SHOULDER PIN 11	1	PC.
34			263002-9		RUBBER PIN 4	1	PC.
35			210029-0		BALL BEARING 608ZZ	1	PC.
36			233925-5		RING SPRING 13	1	PC.
37			227562-5		SPIRAL BEVEL GEAR 38	1	PC.
38			285851-4		BEARING RETAINER	1	PC.
39			911128-8		PAN HEAD SCREW M4X16	3	PC.
40			211241-5		BALL BEARING 6202DDW	1	PC.
41			213720-9		O RING 67	1	PC.
42			922221-3		HEX. SOCKET HEAD BOLT M5X16	4	PC.
43			318523-7		BEARING BOX	1	PC.
44			140315-4		SPINDLE COMPLETE B	1	PC.
		INC.	346166-5		LABYRINTH RING 23	1	PC.
100			654208-4		RECEPTACLE	2	PC.
101			654551-1		CONNECTOR	2	PC.
200			870846-6		CARTON	1	PC.

Item No	Type	Ref	Part No	Description	Qty	Unit
ACCESSORIES						
A01			152539-0	GRIP 36 COMPLETE	1	PC.
A02			782412-6	LOCK NUT WRENCH 28	1	PC.
A03	1		122889-7	WHEEL COVER ASSY F/7"	1	PC.
		INC.	213017-6	O RING 6	1	PC.
		INC.	265198-2	+PAN HEAD SCREW M8X25	1	PC.
	2		122939-8	WHEEL COVER ASSY F/7"	1	PC.
		INC.	213017-6	O RING 6	1	PC.
		INC.	265198-2	+PAN HEAD SCREW M8X25	1	PC.
A04			224317-9	INNER FLANGE 89	1	PC.
			224255-5	INNER FLANGE 78 F/C.O.W COVER	1	PC.
A05			224568-4	LOCK NUT 5/8-45	1	PC.
A06			-----	WIRE CUP BRUSH (See Catalogue for details)	1	PC.
A07			193048-0	SANDING LOCK NUT 5/8-48	1	PC.
A08			194543-3	VIBRATION PROOF GRIP SET	1	PC.
A09			195059-1	DUST COVER ATTACHMENT SET	1	PC.
A10	Opt.		---------	DEPRESSED CENTER GRINDING WHEELS		
A11			---------	7" ABRASIVE DISC (See Catalogue for Details)	1	PC.
A12			743012-7	RUBBER PAD F/7" GRINDER-BULK	1	PC.
A15			122914-4	CUT-OFF WHEEL GUARD FOR 7"	1	PC.
A16			224305-6	OUTER FLANGE 78 F/C.O.W COVER (Use with 224568-4 Lock Nut)	1	PC.

SERVICE CHANGES

1. Changes on Gear Housing Complete (TI#A5294)

Item No.	Description	Type 1	Type 2
4	Gear Housing Complete	140223-9	143016-3

