11 - 2010
EG301A
GENERATOR 3000WATT

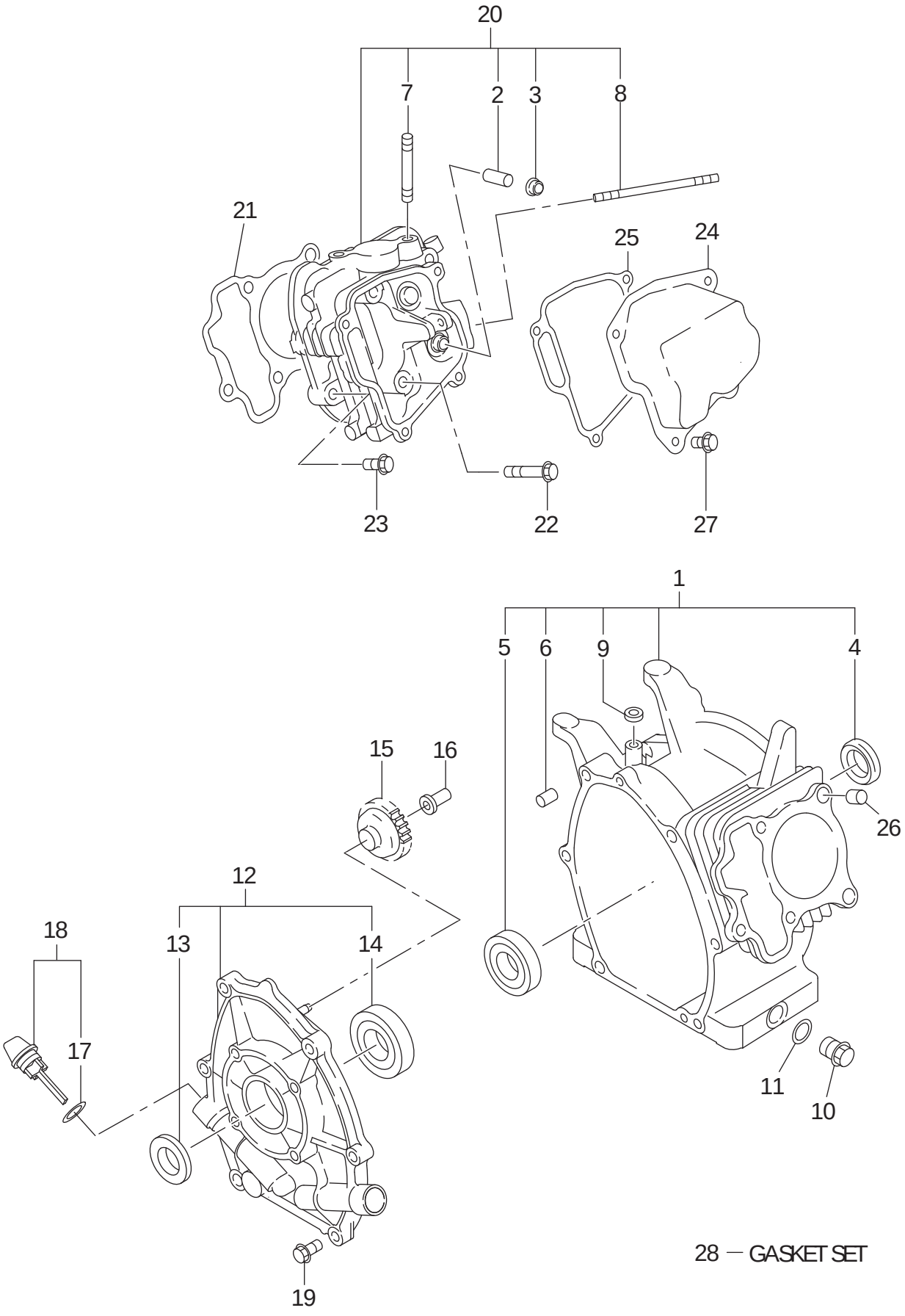

28 — GASKET SET

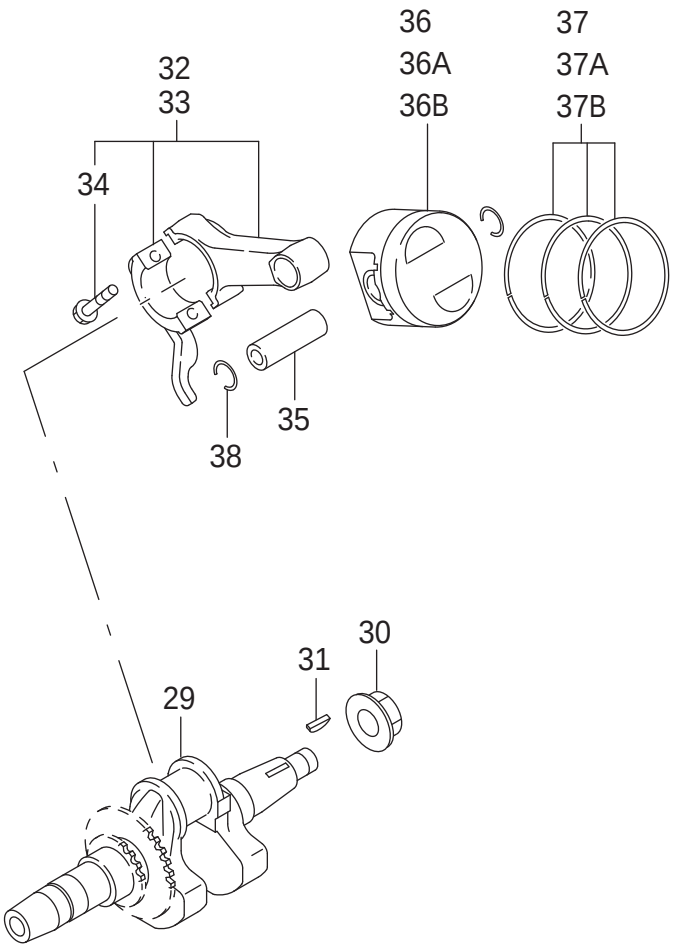
36
36A
36B
37
37A
37B
32
33
34
35
38
30
31
29

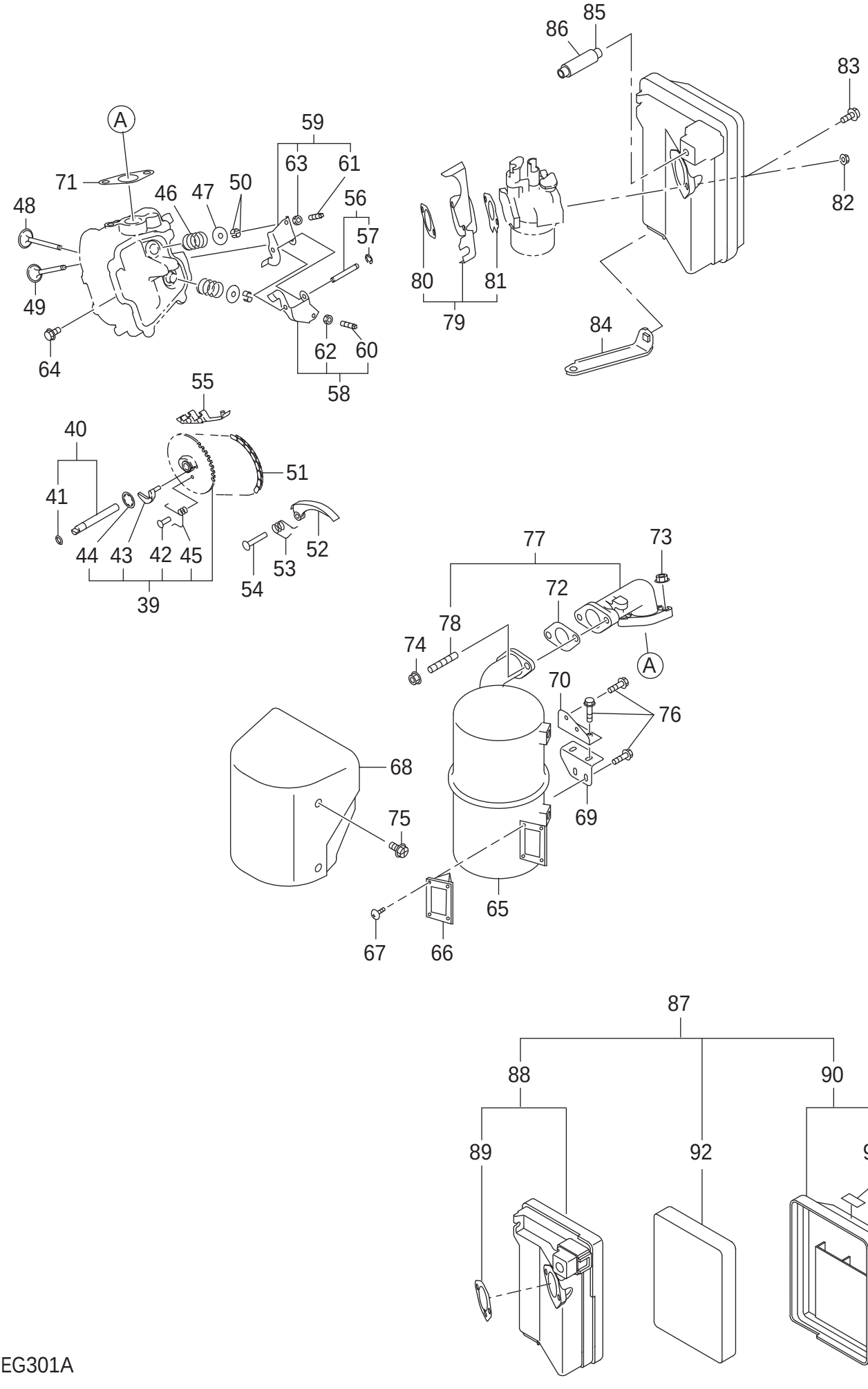
A
59
63
61
71
46
47
50
56
48
57
49
64
62
60
58
55
40
51
41
44
43
42
45
54
53
52
39
86
85
83
82
80
81
79
84
77
73
72
78
74
A
70
76
68
75
69
65
67
66
87
88
90
89
92
91

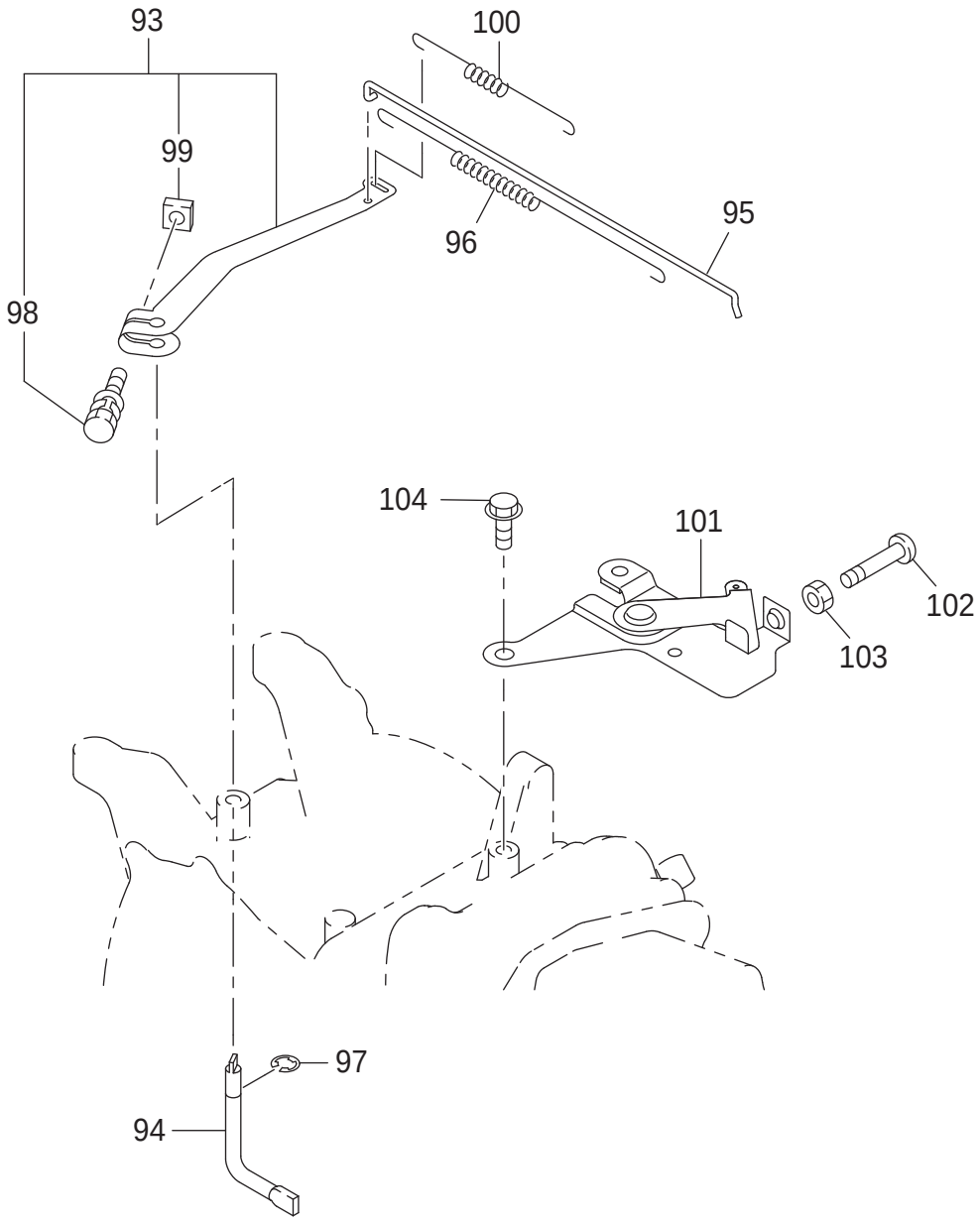
93
100
99
95
96
98
104
101
102
103
97
94

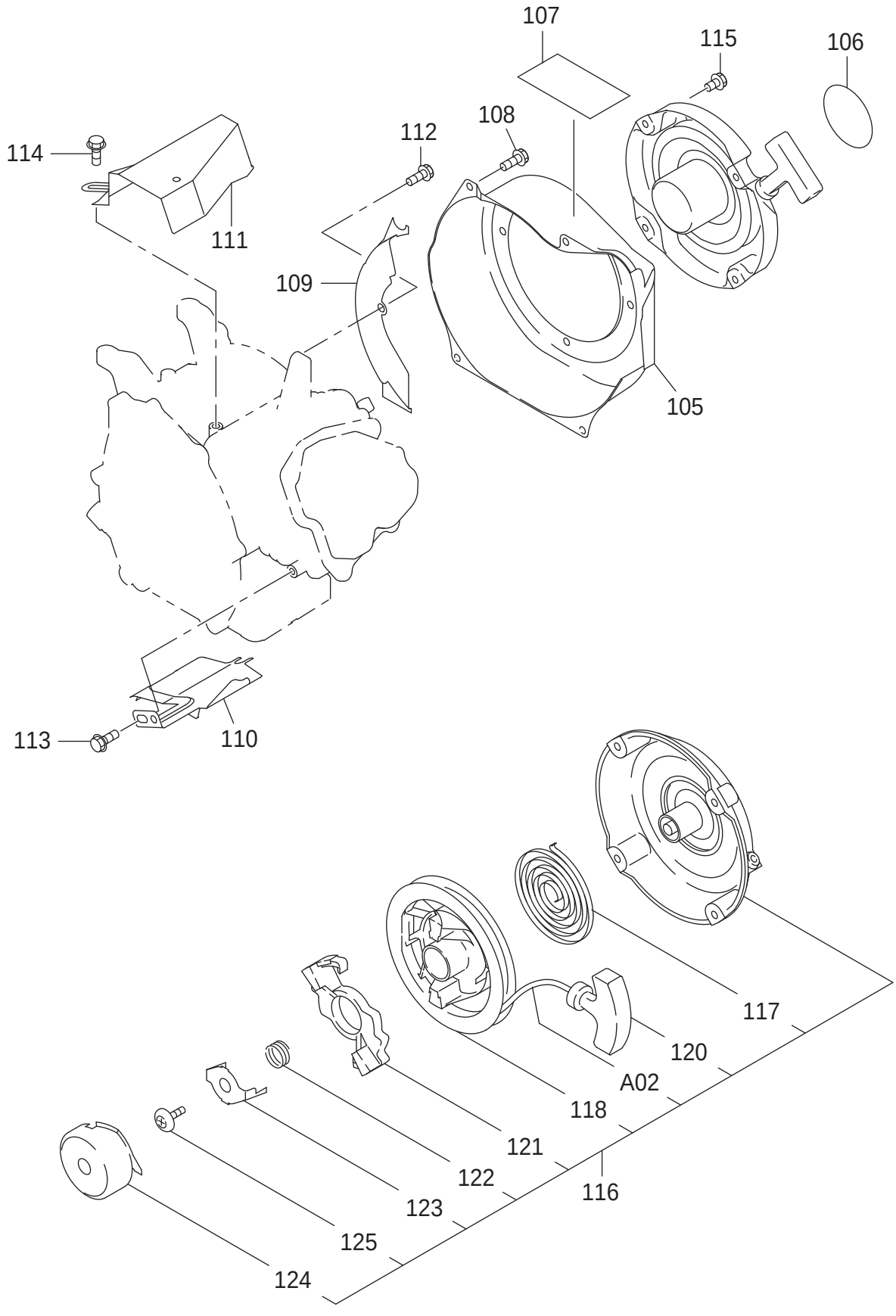
107
115
106
108
112
114
111
109
105
113
110
117
120
A02
118
121
122
123
116
125
124

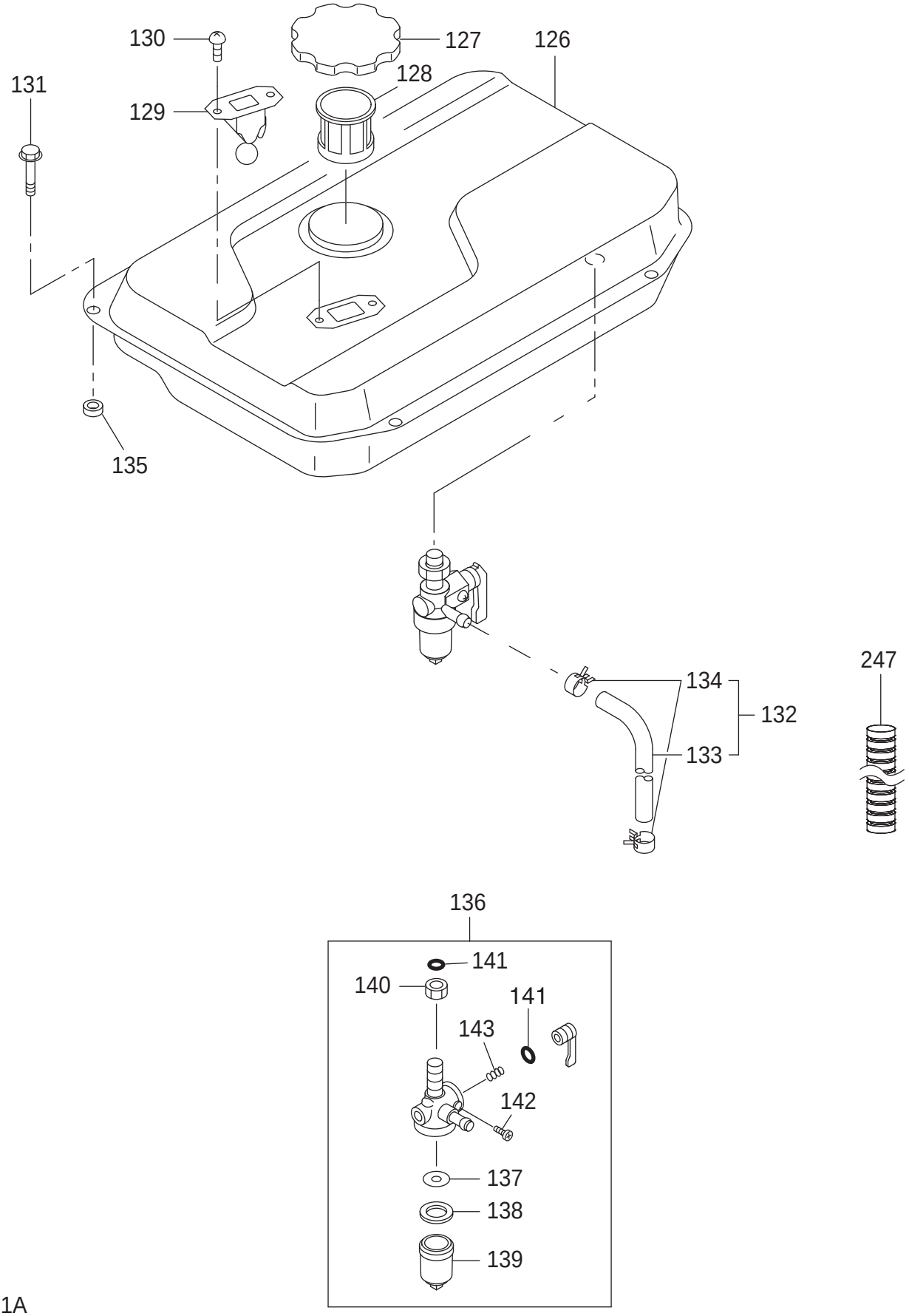
130
127
126
131
128
129
135
247
134
132
133
136
141
140
141
143
142
137
138
139

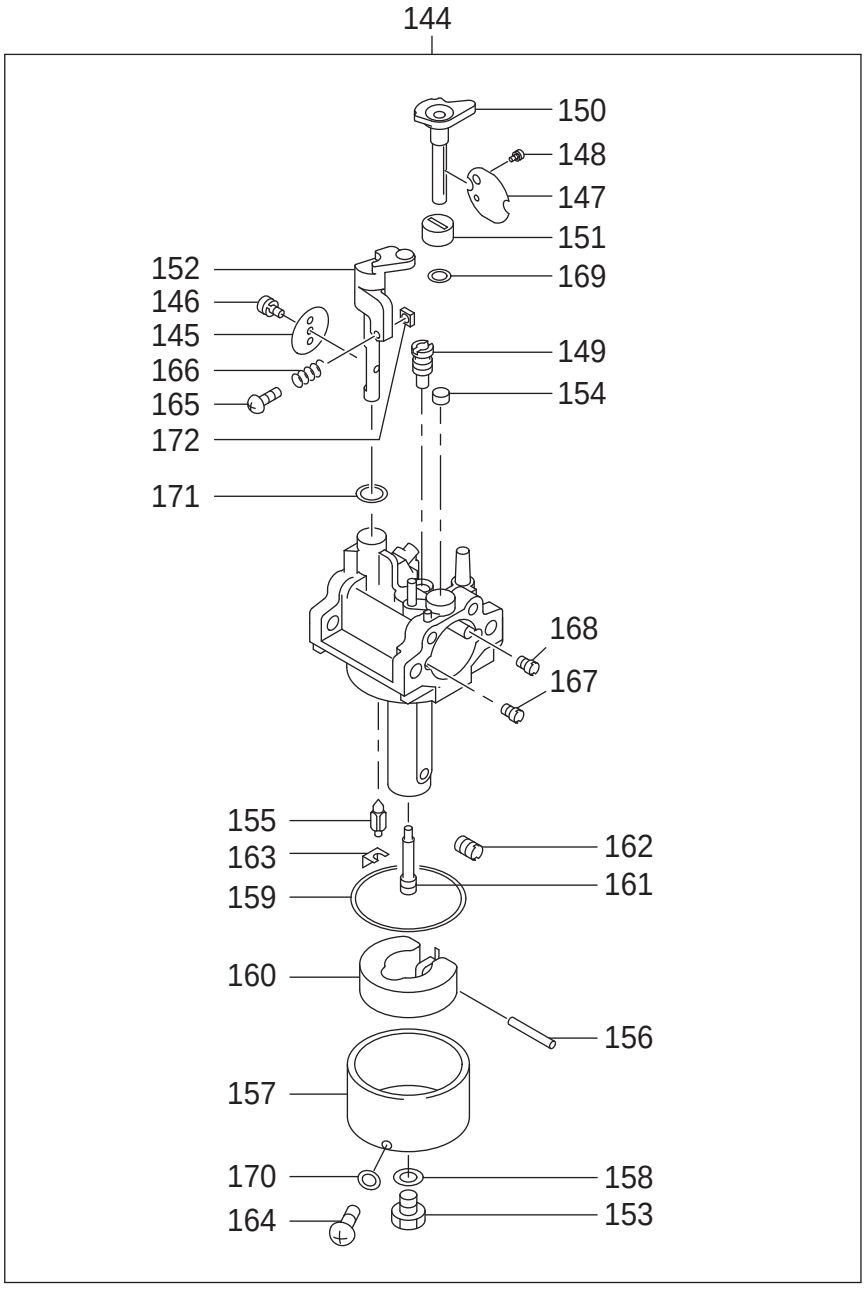
144
150
148
147
151
152
169
146
145
149
166
154
165
172
171
168
167
155
162
163
161
159
160
156
157
170
158
164
153

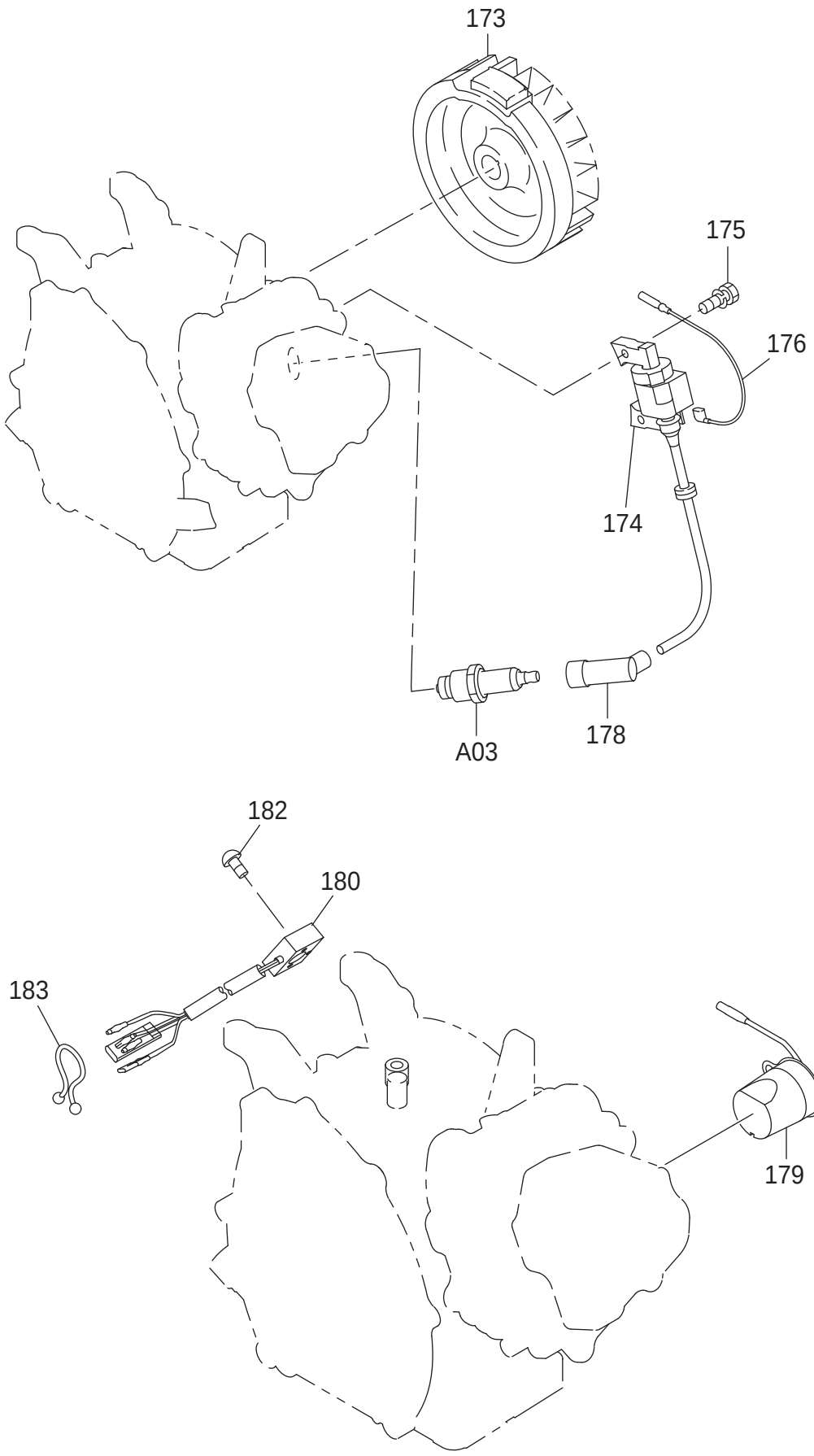
173
175
176
174
A03
178
182
180
183
181
179

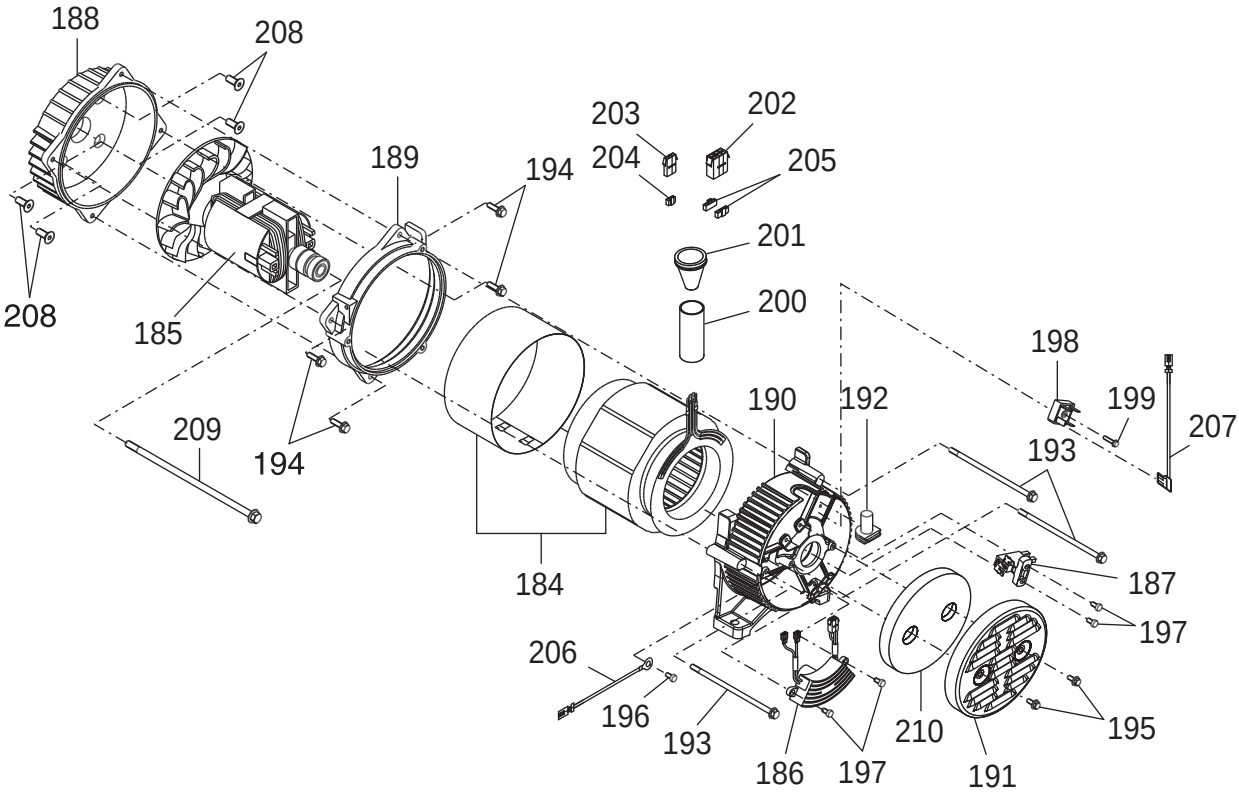
188
208
203
202
204
205
189
194
201
200
208
185
198
199
207
190
192
193
209
194
184
187
197
206
196
193
186
197
210
191
195

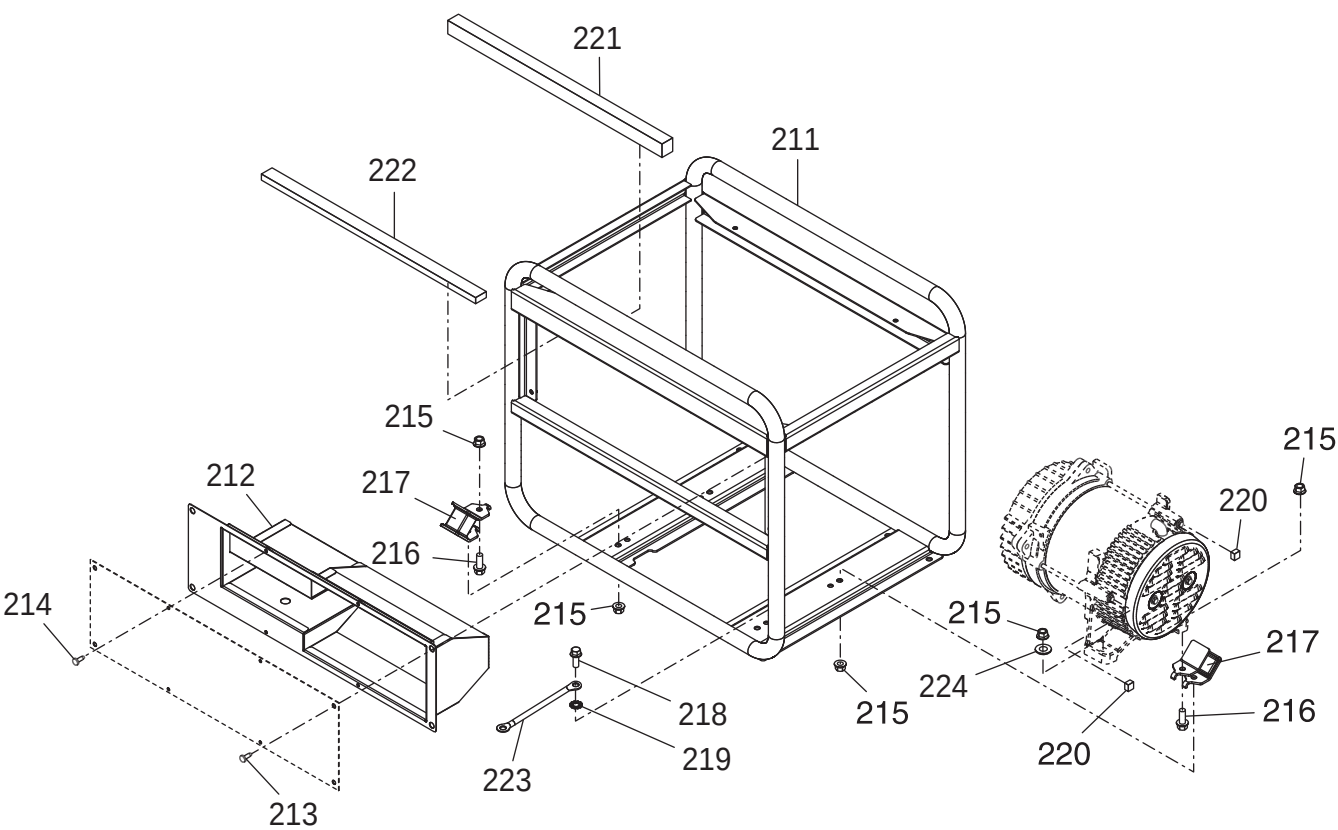
221
211
222
215
215
212
217
220
216
214
215
215
217
224
218
215
216
219
220
223
213

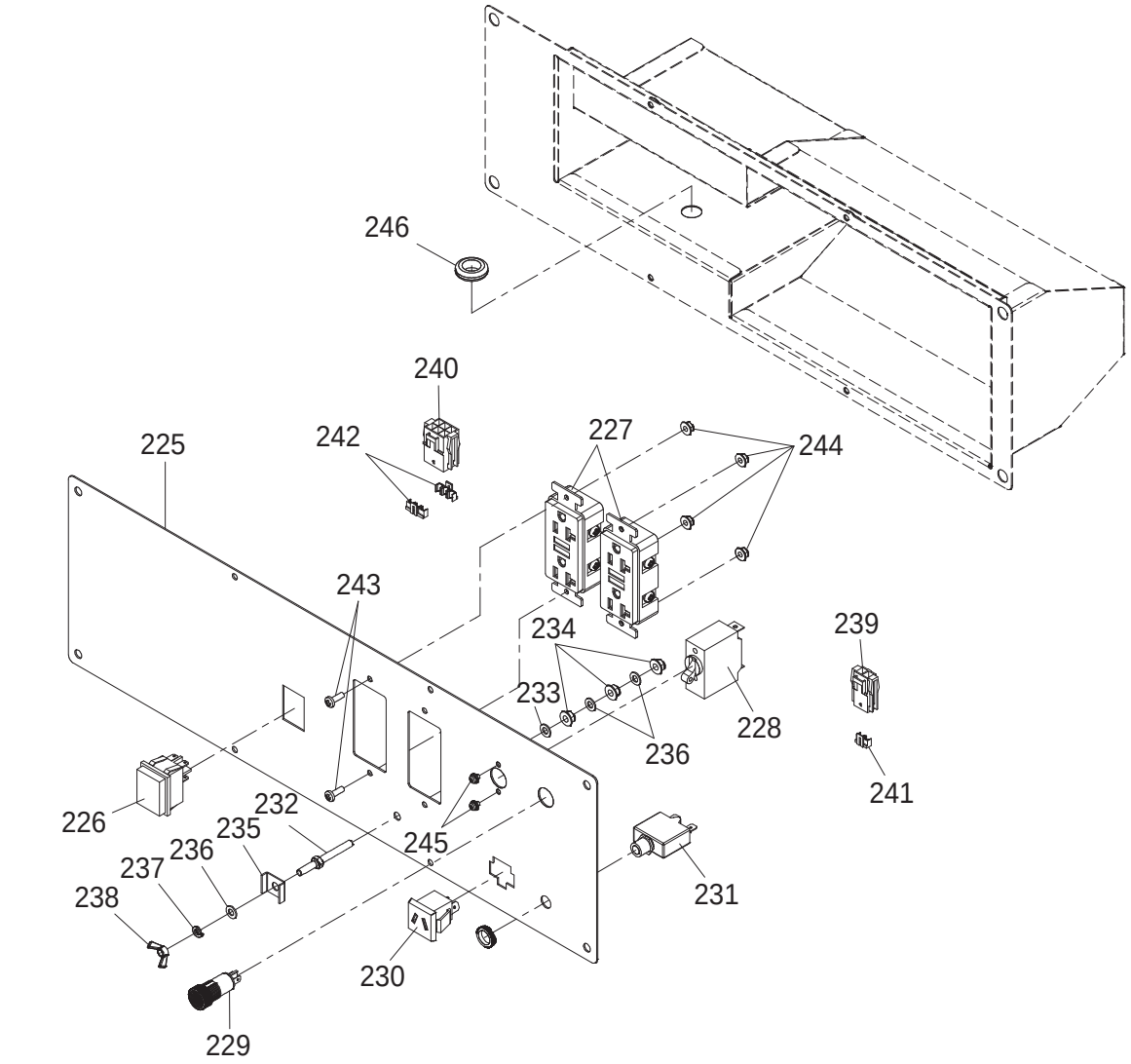
246
240
242
225
227
244
243
234
239
233
228
236
241
226
232
235
245
231
236
237
238
230
229

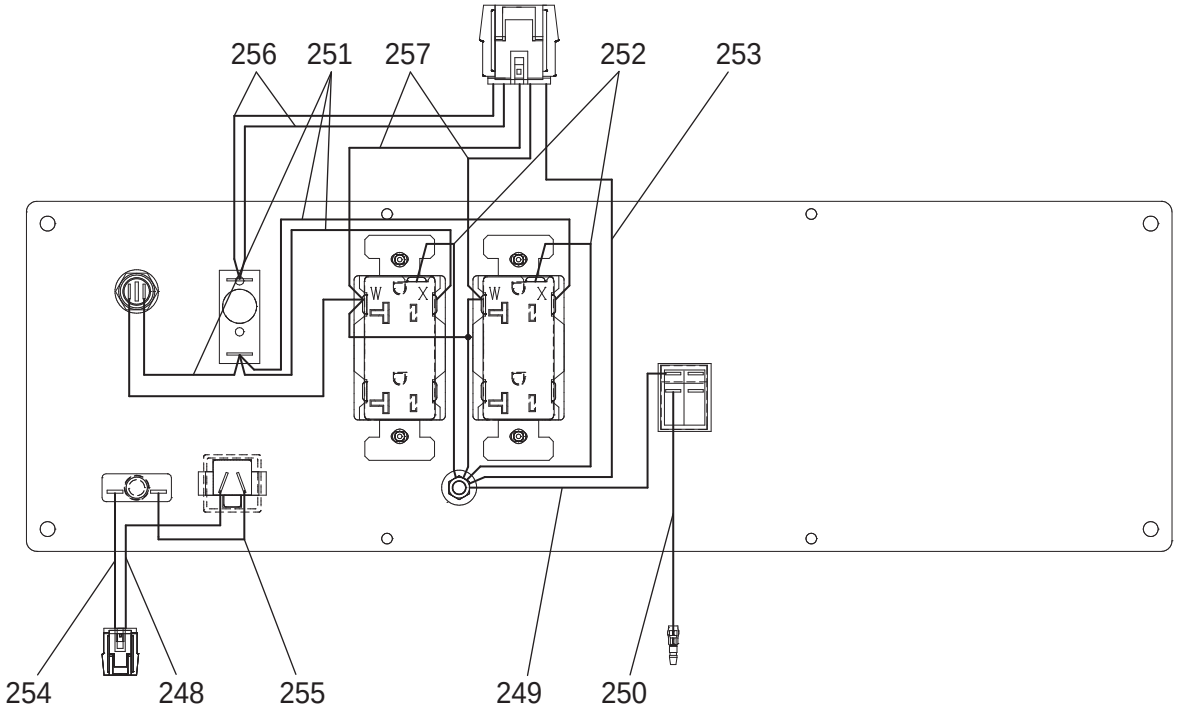
256
251
257
252
253
W
X
W
X
254
248
255
249
250

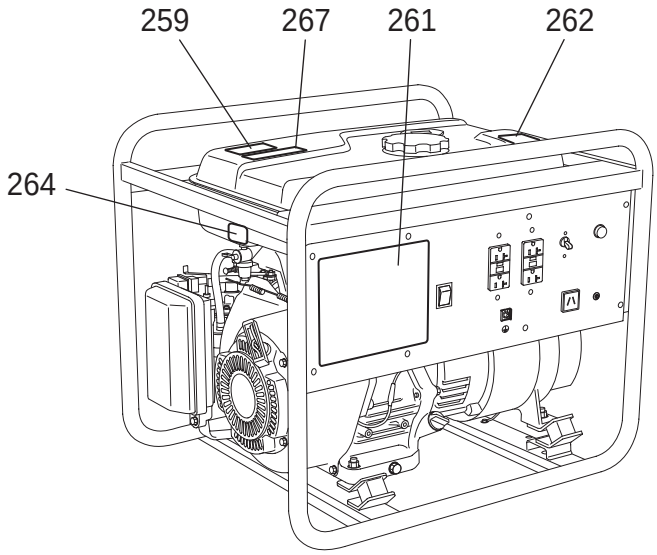
259
267
261
262
264

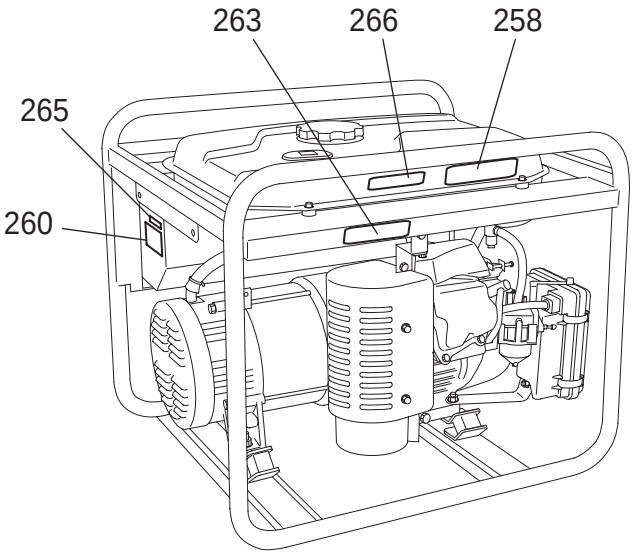
263
266
258
265
260

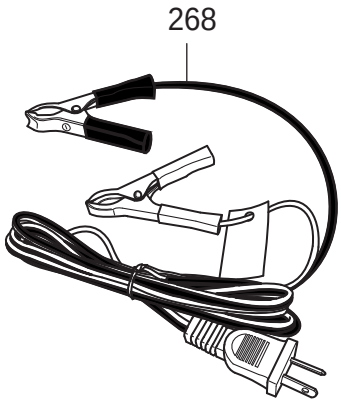
268

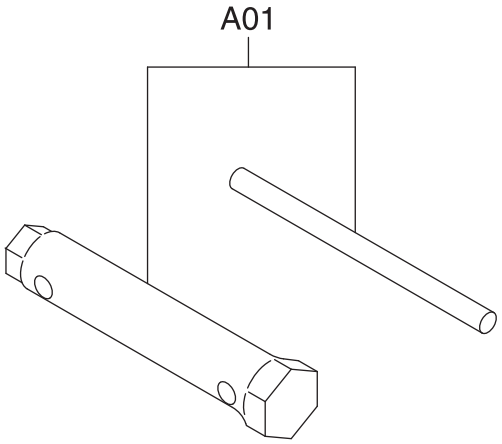
A01

Item No	Type	Ref	Part No	SC	Description	Qty	Unit
1	2		277-10102-61		CRANK CASE CP	1	PC.
	2	INC.			Item No. 4-6,9		
2			237-14202-03		VALVE GUIDE (OVERSIZE)	2	PC.
3			277-16010-01		STEM SEAL	1	PC.
4			044-02502-00		OIL SEAL 25DX38DX7B	1	PC.
5			060-02800-21		BALL BEARING 62/28 28DX58DX16B	1	PC.
6			277-15011-03		PIPE KNOCK 10.3DX8.5DX14L	2	PC.
7			010-50802-90		MUFFLER STUD	2	PC.
8			010-50603-51		STUD M6X1.0X98L	2	PC.
9			044-00600-20		OIL SEAL 6DX10DX2.5B	1	PC.
10			040-11400-30		PLUG	2	PC.
11			021-11400-20		GASKET	2	PC.
12	2		277-11001-41		MAIN BEARING COVER COM	1	PC.
	2	INC.			Item No. 13,14		
	3		277-11001-61		MAIN BEARING COVER COM	1	PC.
	3	INC.			Item No. 13,14		
13			044-02502-10		OIL SEAL 25DX41.25DX6B	1	PC.
14	1		X60-02501-40		BALL BEARING 6205	1	PC.
	2		060-02501-40		BALL BEARING 6205	1	PC.
15	1		277-45004-J1		GOVERNOR GEAR CP	1	PC.
	2		277-45004-K1		GOVERNOR GEAR COM.	1	PC.
16	2		277-41902-01		GOVERNOR SLEEVE COM	1	PC.
17	3		021-31600-20		GASKET	2	PC.
18			277-63601-30		OIL GAUGE	2	PC.
		INC.			Item No. 17		
19			001-04083-50		FLANGE BOLT	6	PC.
20			277-13002-11		CYLINDER HEAD COMPLETE	1	PC.
		INC.			Item No. 2,3,7,8		
21	1		277-15001-33		GASKET(HEAD)	1	PC.
	2		277-15001-43		GASKET(HEAD)	1	PC.
22			011-00802-40		FLANGE BOLT M8X1.25X16DX68L	4	PC.
23			011-00803-10		FLANGE BOLT M8X33L	1	PC.
24	1		277-15503-01		ROCKER COVER COM	1	PC.
	2		277-15503-11		ROCKER COVER COM	1	PC.
25	1		277-16001-13		GASKET(ROCKER COVER)T=0.7	1	PC.
	2		277-16001-23		GASKET(ROCKER COVER)T=0.7	1	PC.
26			277-15011-03		PIPE KNOCK 10.3DX8.5DX14L	2	PC.
27			011-00600-20		FLANGE BOLT M6X1.0X14DX12L	4	PC.
28	3		277-99001-67		GASKET SET	1	PC.
	3	INC.			Item No. 11,17,21,25,71,80,81		
	4		277-99001-77		GASKET SET	1	PC.
	4	INC.			Item No. 11,17,21,25,71,80,81		
29			277-20701-21		CRANKSHAFT COMPLETE	1	PC.
30			018-01400-20		FLANGE NUT M14X1.5X28DX12H	1	PC.
31			032-30300-10		WOODRUFF KEY	1	PC.
32			277-22501-10		CONNECTING ROD ASS'Y	1	PC.
		INC.			Item No. 34		
33			277-22502-00		CONNECTING ROD ASSY	1	PC.
		INC.			Item No. 34		
34			277-23001-03		CONNECTING ROD BOLT	2	PC.
35			277-23301-13		PISTON PIN 16DX11DX48.5L	1	PC.
36			277-23401-J3		PISTON STD	1	PC.
036A			277-23403-J3		PISTON 0.25 OVER SIZE	1	PC.
036B			277-23404-J3		PISTON 0.50 OVER SIZE	1	PC.

Item No	Type	Ref	Part No	SC	Description	Qty	Unit
37			277-23531-07		PISTON RING SET STD OIL 3PCS.	1	PC.
037A			277-23532-07		PISTON RING SET.25 O.S.OIL3PCS	1	PC.
037B			277-23533-07		PISTON RING SET.50 0.S.OIL3PCS	1	PC.
38			056-51600-10		CLIP	2	PC.
39	1		278-31601-31	*	CAM SHAFT CP	1	PC.
	1	INC.			Item No. 42-45		
	2		278-31601-41	*	CAM SHAFT CP	1	PC.
	2	INC.			Item No. 42-45		
	3		278-31601-51	*	CAM SHAFT COMPLETE	1	PC.
	3	INC.			Item No. 42-45		
	4		278-31601-61	*	CAM SHAFT COMPLETE	1	PC.
	4	INC.			Item No. 42-45		
	5		278-31601-71	*	CAM SHAFT COMPLETE	1	PC.
	5	INC.			Item No. 42-45		
40			277-35101-01		PIN(CAM SHAFT)CP	1	PC.
		INC.			Item No. 41		
41			024-00600-10		O RING 5.8DX9.6D - N/L/A as individually	1	PC.
42			277-38601-03		PIN(SPRING) 4DX8DX9L	1	PC.
43	1		277-36401-03		RELEASE LEVER	1	PC.
	2		277-36401-13		RELEASE LEVER	1	PC.
44			277-36501-03		CLIP 13.8DX20.3DX4T	1	PC.
45	5		277-38703-33	*	RETURN SPRING	1	PC.
46			279-33601-03		VALVE SPING	2	PC.
47			269-33701-03		SPRING RETAINER	2	PC.
48	1		277-33401-H3		INTAKE VALVE	1	PC.
	2		20A-33401-03		INTAKE VALVE	1	PC.
49	1		277-33501-H3		EXHAUST VALVE 23.5DX5.5DX68.1L	1	PC.
	2		20A-33501-03		EXHAUST VALVE 23.5DX5.5DX68.1L	1	PC.
50			132-10KA0-31		COLLET VALVE	4	PC.
51	1		277-35601-11		TIMING CHAIN COMPLETE - N/L/A	1	PC.
	2		277-35602-H1		TIMING CHAIN COMPLETE	1	PC.
52	1		277-36911-03		TENSIONER	1	PC.
	2		20A-36911-03		TENSIONER	1	PC.
53			277-37101-03		SPRING(TENSIONER)	1	PC.
54			277-36902-03		PIN(TENSIONER) 6DX13DX34L	1	PC.
55	2		20A-36913-03		CHAIN GUIDE	1	PC.
56			277-35004-01		PIN(ROCKER) CP	1	PC.
		INC.			Item No. 57		
57			003-13050-00		CLIP	1	PC.
58			277-36201-00		LOCKER ARM(INTAKE) ASS'Y	1	PC.
		INC.			Item No. 60,62		
59			277-36202-00		ROCKER ARM(EXHAUST)ASS'Y	1	PC.
		INC.			Item No. 61,63		
60			014-90500-20		ADJUST SCREW M5X23	1	PC.
61			014-90500-20		ADJUST SCREW M5X23	1	PC.
62			017-00500-30		NUT M5	1	PC.
63			017-00500-30		NUT M5	1	PC.
64			011-00600-10		FLANGE BOLT M6X1.0X14DX8L	1	PC.
65			277-30502-01		MUFFLER CP	1	PC.
66			227-37602-11		SPARK ARRESTOR	1	PC.
67			015-00400-10		TAPPING SCREW	4	PC.
68			277-34703-01		MUFFLER COVER CP	1	PC.
69			277-39101-01		MUFFLER BRACKET 1 CP	1	PC.
70			277-39102-01		MUFFLER BRACKET 2 CP	1	PC.

Item No	Type	Ref	Part No	SC	Description	Qty	Unit
71			277-35201-13		GASKET(MUFFLER)	1	PC.
72			277-35201-01		GASKET EXHAUST T=1.6 28DX52P	1	PC.
73			002-38080-00		FLANGE NUT	2	PC.
74			002-38080-00		FLANGE NUT	2	PC.
75			011-00600-10		FLANGE BOLT M6X1.0X14DX8L	4	PC.
76			001-14061-60		BOLT & WASHER ASS'Y	6	PC.
77			277-34001-01		EXHAUST PIPE COMPLETE	1	PC.
		INC.			Item No. 78		
78			010-50802-90		MUFFLER STUD	2	PC.
79	2		20A-32902-01		INSULATOR COMPLETE	1	PC.
	2	INC.			Item No. 80-81		
80	2		20A-35903-03		GASKET 2(INSULATOR)	1	PC.
81	2		20A-35902-03		GASKET 1(INSULATOR)	1	PC.
82			002-38060-00		FLANGE NUT M6	2	PC.
83			001-04062-00		FLANGE BOLT M6X20	1	PC.
84	1		277-39001-01		BRACKET(AIR CLEANER) COMPLETE	1	PC.
	2		277-39001-11		BRACKET(AIR CLEANER) COMPLETE	1	PC.
85			277-32762-08		BREATHER PIPE	1	PC.
86	2		277-69002-03		SPONGE PROTECTOR	1	PC.
87	3		277-32722-30		AIR CLEANER ASSY	1	PC.
	3	INC.			Item No. 88-92		
88			277-32632-08		BASE COMPLETE	1	PC.
		INC.			Item No. 89		
89			277-32604-08		PACKING	1	PC.
90	2		277-32643-28		COVER CP	1	PC.
	2	INC.			Item No. 91		
92			277-32661-17		ELEMENT	1	PC.
93			277-42301-40		GOVERNOR LEVER	1	PC.
		INC.			Item No. 98-99		
94			277-42201-33		GOVERNOR SHAFT	1	PC.
95			277-42701-23		GOVERNOR ROD	1	PC.
96			277-42801-23		ROD SPRING 7DX.5DX182L N=16	1	PC.
97			003-13050-00		CLIP	1	PC.
98			001-14062-50		BOLT & WASHER ASS'Y	1	PC.
99			018-60600-20		NUT M6X1.0X4.9H	1	PC.
100			277-42510-23		GOVERNOR SPRING	1	PC.
101			277-46501-11		SPEED CONTROL COMPLETE	1	PC.
102			004-31064-00		SCREW	1	PC.
103			002-17060-00		NUT M6	1	PC.
104			011-00600-20		FLANGE BOLT M6X1.0X14DX12L	2	PC.
105			277-51205-01		BLOWER HOUSING COMPLETE	1	PC.
106			20B-91702-03		LABEL(MAKITA)	1	PC.
107			073-20055-70		LABEL(CAUTION)	1	PC.
108			011-00600-30		FLANGE BOLT M6X1.0X14DX14L	4	PC.
109			277-52711-21		BAFFLE 1 CP	1	PC.
110			277-52702-03		BAFFLE 2(HEAD) COMPLETE	1	PC.
111	1		277-55001-21		DUCT (CASE) CP	1	PC.
	2		277-55002-03		DUCT (CASE) CP	1	PC.
112			001-04061-40		FLANGE BOLT	1	PC.
113			011-00600-20		FLANGE BOLT M6X1.0X14DX12L	1	PC.
114			011-00600-20		FLANGE BOLT M6X1.0X14DX12L	3	PC.
115			013-00602-81		BOLT AND WASHER ASSY	4	PC.
116	2		277-50301-30		RECOIL STARTER AY	1	PC.
	2	INC.			Item No. 117-125		

Item No	Type	Ref	Part No	SC	Description	Qty	Unit
117			226-50716-08		SPIRAL SPRING	1	PC.
118			277-50121-08		REEL	1	PC.
121			281-50325-08		RATCHET	1	PC.
122			281-50330-08		FRICTION SPRING	1	PC.
123			281-50340-08		FRICTION PLATE	1	PC.
124			277-50145-08		STARTER PULLEY	1	PC.
125			281-50351-08		CENTER SCREW	1	PC.
126			270-61722-01		FUEL TANK CP	1	PC.
127			043-05900-11		FUEL TANK CAP ASSY	1	PC.
128			064-15400-11		FUEL FILTER	1	PC.
129			064-80018-00		FUEL GAUGE CP	1	PC.
130			014-50500-40		SCREW	2	PC.
131			011-00602-20		FLANGE BOLT	4	PC.
132	1		269-62613-01		FUEL PIPE 3,SET	1	PC.
	1	INC.			Item No. 133-134		
	2		269-62613-11		FUEL PIPE 3,SET	1	PC.
	2	INC.			Item No. 133-134		
133			269-68012-03		RUBBER PIPE	1	PC.
134			056-11100-20		HOSE CLAMP 11D	2	PC.
135			391-39000-13		RUBBER (TANK)	4	PC.
136			064-20100-01		FUEL STRAINER ASS'Y	1	PC.
136		INC.			Item No. 137-143		
137	2		064-20014-20		FILTER	1	PC.
138			064-20014-30		PACKING	1	PC.
139			064-20014-10		CUP	1	PC.
140			064-20100-30		LOCK NUT	1	PC.
141			064-20003-30		O-RING	2	PC.
142			064-20027-90		LOCK BOLT	1	PC.
143			064-20032-30		SPRING	1	PC.
144	3		277-62304-60		CABURETOR ASS'Y	1	PC.
	3	INC.			Item No. 145-172		
145			277-62535-08		THROTTLE VALVE #160	1	PC.
146			209-62351-08		SCREW ASS'Y	1	PC.
147			277-62527-08		VALVE CHOKE	1	PC.
148			237-62451-08		SCREW	2	PC.
149			246-62420-08		PILOT JET (#40)	1	PC.
150			277-62522-08		CHOKE LEVER	1	PC.
151			277-62570-28		RING	1	PC.
152			277-62531-18		THROTTLE SHAFT-A	1	PC.
153			227-62451-08		BOLT	1	PC.
154			277-62571-08		RING	1	PC.
155			277-62500-08		NEEDLE	1	PC.
156			277-62515-08		PIN	1	PC.
157			277-62506-08		FLOAT BODY	1	PC.
158			214-62450-08		PACKING	1	PC.
159			214-62540-08		FLOAT CHAMBER PACKING	1	PC.
160			226-62506-08		FLOAT ASS'Y	1	PC.
161			277-62440-08		MAIN NOZZLE	1	PC.
162			277-62402-08		MAIN JET #81.3	1	PC.
163			226-62701-18		CLIP	1	PC.
164			277-62360-08		BOLT	1	PC.
165			106-62556-08		SCREW	1	PC.
166			283-62357-08		SPRING	1	PC.
167			248-62410-08		AIR JET	1	PC.

Item No	Type	Ref	Part No	SC	Description	Qty	Unit
168			106-62410-08		AIR JET(PILOT)	1	PC.
169			236-62680-08		SEAL	1	PC.
170			236-62541-08		PACKING	1	PC.
171			246-62390-08		SEAL	1	PC.
172			277-62553-08		NUT	1	PC.
173			277-79230-11		FLYWHEEL COMPLETE	1	PC.
174			277-79431-11		IGNITION COIL COMPLETE	1	PC.
175			001-04062-00		FLANGE BOLT M6X20	2	PC.
176			277-73102-H1		WIRE 2 COMPLETE	1	PC.
178	3		X65-50002-71		SPARK PLUG CAP	1	PC.
179			277-76301-21		OIL SENSOR CP	1	PC.
180			KU3-11070-01		FLOAT C/U CP4	1	PC.
181			001-04061-40		FLANGE BOLT	2	PC.
182			015-00400-90		TAPPING SCREW 4X12	2	PC.
183			056-90000-20		PURSE LOCK ASS'Y	1	PC.
184	1		36A-20007-08		STATOR COMPLETE	1	PC.
	2		FJ2-04240-02		STATOR COMPLETE	1	PC.
185	2		FJ9-03960-02		ROTOR CP	1	PC.
186	2		FJ5-02030-01		AVR COMPLETE	1	PC.
187			36A-20300-08		BRUSH CP	1	PC.
188			36A-22000-08		GEN BRACKET 1	1	PC.
189			36A-22100-08		GEN BRACKET N	1	PC.
190			36A-22200-08		GEN BRACKET 2	1	PC.
191			36A-23000-08		BRACKET COVER	1	PC.
192			36A-25006-08		BUSHING	1	PC.
193			36A-21000-08		STATOR BOLT	3	PC.
194			36A-80000-08		FLANGE BOLT	4	PC.
195			36A-80001-08		FLANGE BOLT	2	PC.
196			36A-80100-08		SCREW & WASHER AY	1	PC.
197			36A-80002-08		FLANGE BOLT	4	PC.
198			36A-25001-08		DIODE CP	1	PC.
199			36A-80101-08		SCREW & WASHER AY	1	PC.
200			36A-25002-08		TUBE	1	PC.
201			36A-25003-08		GROMMET	1	PC.
202			36A-70000-08		CONNECTOR(6P)	1	PC.
203			36A-70002-08		CONNECTOR(2P)	1	PC.
204			36A-70101-08		RETAINER(2P)	1	PC.
205			36A-70100-08		RETAINER(3P)	2	PC.
206			36A-71000-08		WIRE(GREEN)	1	PC.
207			36A-71001-08		WIRE(WHITE)	1	PC.
208			36A-80200-08		SCREW	4	PC.
209			36A-21100-08		ROTOR BOLT	1	PC.
210			36A-25004-08		SPONGE(FILTER)	1	PC.
211			36A-30000-08		PIPE FRAME CP	1	PC.
212			36A-40001-08		CONTROL BOX AY	1	PC.
213			36A-80104-08		SCREW & WASHER AY	4	PC.
214			36A-80105-08		SCREW & WASHER AY	4	PC.
215			36A-81002-08		FLANGE NUT	8	PC.
216			36A-80003-08		FLANGE BOLT	4	PC.
217			36A-31000-08		MOUNT CP	4	PC.
218			36A-80004-08		FLANGE BOLT	1	PC.
219			36A-82001-08		LOCK WASHER	1	PC.
220			36A-25005-08		SPONGE(GEN)	2	PC.
221			36A-35000-08		SPONGE(TANK)	1	PC.

Item No	Type	Ref	Part No	SC	Description	Qty	Unit
222			36A-35001-08		SPONGE(PANEL)	1	PC.
223			36A-71007-08		WIRE(GREEN/YELLOW)	1	PC.
224			36A-82201-08		WASHER	1	PC.
225			36A-41007-08		CONTROL PANEL CP	1	PC.
226			36A-49000-08		SWITCH(ENGINE)	1	PC.
227			36A-47002-08		AC CONCENT(GFCI)	2	PC.
228			36A-48002-08		CIRCUIT BREAKER(23A)	1	PC.
229			36A-49003-08		PILOT LAMP	1	PC.
230			36A-47101-08		DC CONCENT	1	PC.
231			36A-48000-08		CIRCUIT BREAKER(10A)	1	PC.
232			36A-80080-08		STUD BOLT	1	PC.
233			36A-82000-08		LOCK WASHER	1	PC.
234			36A-81000-08		FLANGE NUT	3	PC.
235			36A-82100-08		CAP WASHER	1	PC.
236			36A-82200-08		WASHER	3	PC.
237			36A-82300-08		SPRING WASHER	1	PC.
238			36A-81100-08		WING NUT	1	PC.
239			36A-70003-08		CONNECTOR(2P)	1	PC.
240			36A-70001-08		CONNECTOR(6P)	1	PC.
241			36A-70101-08		RETAINER(2P)	1	PC.
242			36A-70100-08		RETAINER(3P)	2	PC.
243			36A-80202-08		SCREW	4	PC.
244			36A-81001-08		FLANGE NUT	4	PC.
245			36A-80103-08		SCREW & WASHER AY	2	PC.
246			36A-49900-08		GROMMET	1	PC.
247			36A-60001-08		CORRUGATED TUBE(100)	1	PC.
248			36A-71004-08		WIRE(BLACK)	1	PC.
249			36A-71005-08		WIRE(GREEN)	1	PC.
250			36A-71006-08		WIRE(BLACK)	1	PC.
251			36A-71069-08		WIRE(RED)	1	PC.
252			36A-71070-08		WIRE(GREEN)	2	PC.
253			36A-71071-08		WIRE(GREEN)	1	PC.
254			36A-71072-08		WIRE(WHITE)	1	PC.
255			36A-71073-08		WIRE(WHITE)	1	PC.
256			36A-71074-08		WIRE(RED)	1	PC.
257			36A-71075-08		WIRE(BLUE)	1	PC.
258			36A-98012-08		LABEL(SNOW-RAIN)	1	PC.
259			36A-98013-08		LABEL(CO GAS)	1	PC.
260			36A-91010-08		LABEL(SPEC)	1	PC.
261			36A-98014-08		LABEL(TRADE MARK)	1	PC.
262			36A-98015-08		LABEL(SYMBOL-TANK)	1	PC.
263			36A-98016-08		LABEL(HOT & GAS)	1	PC.
264			36A-98017-08		LABEL(FUEL_COCK)	1	PC.
265			36A-98018-08		LABEL(BARCODE)	1	PC.
266			36A-98019-08		LABEL(CAUTION_ONLY)	1	PC.
267			36A-98020-08		LABEL(CAUTION_BRUSH)	1	PC.
268			36A-79000-08		BATTERY CABLE	1	PC.
ACCESSORIES			**- See Catalogue or visit www.makita.ca for more accessories -**				
A01	1		277-90301-H0		ACCESSORY TOOL KIT	1	PC.
	2		277-90301-J0		ACCESSORY TOOL KIT	1	PC.
A02			277-50110-08		STARTER ROPE	1	PC.
A03			065-01402-10		SPARK PLUG	1	PC.
A04			110004-B		WHEEL KIT (SEE PARTS BREAKDOWN 110004-B)	1	PC.

SERVICE CHANGES

1. Changes on Cam Shaft Complete & Retrun Spring

			(TI#Y05704)	(TI#Y06493)	(TI#Y06940) (TI#Y06943)	(TI#Y07268)
Item No.	**Description**	**Type 1**	**Type 2**	**Type 3**	**Type 4**	**Type 5**
39	Cam Shaft Complete	278-31601-31	278-31601-41	278-31601-51	278-31601-61	278-31601-71
45	Return Spring	279-38701-	277-38703-	277-38703-	277-38703-23	277-38703-33

Above parts are completely interchangeable as a set.

*** No. 45 is included in No. 39

No.45 Type 3 Type 4

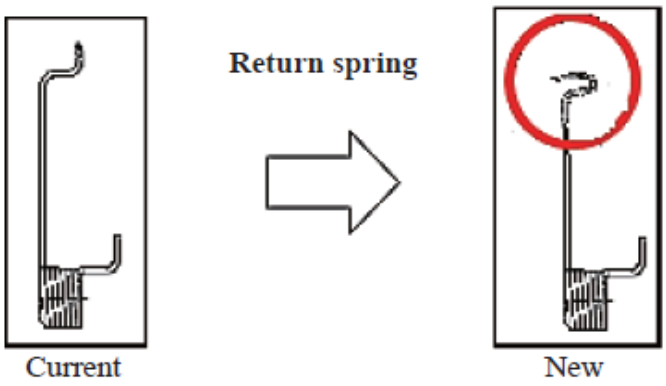

Type 4 Type 5

