makita®

04- 2014
DTW450RFE, DTW450RTE, DTW450Z, DTW450F
18V IMPACT WRENCH (ROUND PIN)

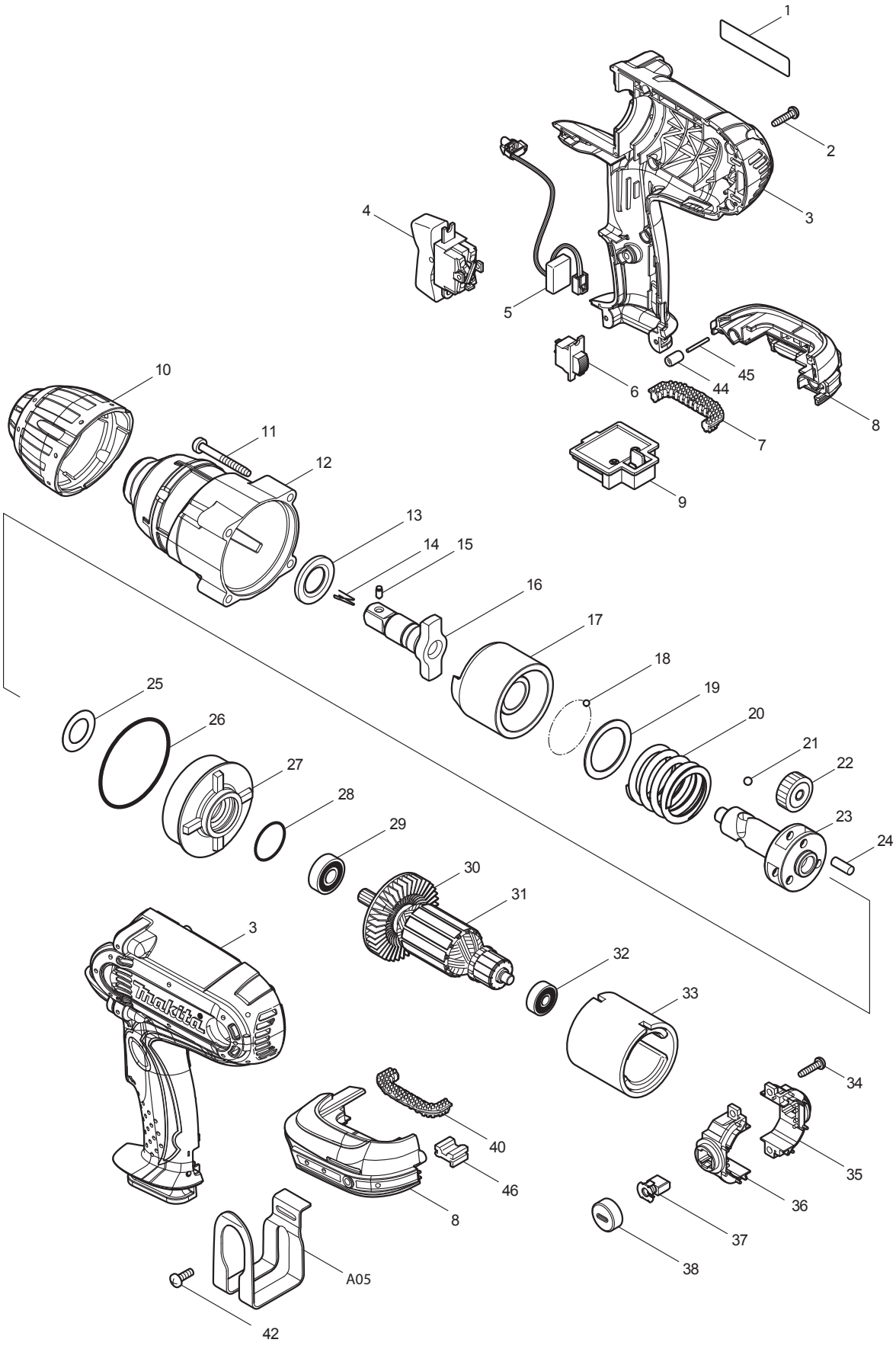

Item No	Type	Ref	R	Part No	Description	Qty	Unit
1				850H18-7	NAME PLATE F/DTW450	1	PC.
2				265995-6	TAPPING SCREW 4X18	9	PC.
3				187932-9	HOUSING SET	1	SET
		INC.		263025-7	RUBBER PIN 4	4	PC.
		INC.		802J50-9	CAUTION LABEL	1	PC.
4				651572-4	SWITCH SL220SD-19	1	PC.
5				631738-2	LIGHT CIRCUIT	1	PC.
6				638503-0	SWITCH UNIT	1	PC.
7				424042-4	CUSHION RUBBER	1	PC.
8				187873-9	BATTERY HOUSING SET	1	PC.
		INC.		263005-3	RUBBER PIN 6	2	PC.
9	1			643843-3	TERMINAL	1	PC.
	2			643844-1	TERMINAL	1	PC.
10				421971-2	BUMPER	1	PC.
11				266056-5	TAPPING SCREW 5X45	4	PC.
12				158076-2	HAMMER CASE COMPLETE	1	PC.
13				267268-3	FLAT WASHER 19	1	PC.
14				322045-1	CLIP	1	PC.
15				323675-1	PIN 4, ROUND HEAD	1	PC.
16	1			324405-3	ANVIL	1	PC.
	2			326982-1	ANVIL	1	PC.
17				324697-4	HAMMER	1	PC.
18				216008-6	STEEL BALL 4	29	PC.
19				267340-1	FLAT WASHER 32	2	PC.
20				234338-3	COMPRESSION SPRING 33	1	PC.
21				216007-8	STEEL BALL 6.4	2	PC.
22				227171-0	SPUR GEAR 23	3	PC.
23				310185-7	SPINDLE	1	PC.
24				256033-5	PIN 6	3	PC.
25				253794-8	FLAT WASHER 18	1	PC.
26				213722-5	O RING 63	1	PC.
27				227172-8	INTERNAL GEAR 53	1	PC.
28				213407-3	O RING 26	1	PC.
29				210059-1	BALL BEARING 6000DDW	1	PC.
30				241850-6	FAN 60	1	PC.
31				519199-5	ARMATURE ASS'Y 18V	1	PC.
		INC.			Item No. 29,30,32		
32				210025-8	BALL BEARING 627LLB	1	PC.
33				638107-8	YOKE UNIT	1	PC.
34				265995-6	TAPPING SCREW 4X18	2	PC.
35				643818-2	BRUSH HOLDER	1	PC.
36				643823-9	BRUSH HOLDER	1	PC.
37				195022-4	CARBON BRUSH CB-441, 2PCS/SET, W/ORIGIN	1	SET
38	1			643941-3	BRUSH HOLDER CAP	2	PC.
	2			643829-7	HOLDER CAP	2	PC.
40				424042-4	CUSHION RUBBER	1	PC.
42				251314-2	+ SCREW M4X12	1	PC.
44				263036-2	RUBBER PIN 5	1	PC.
45				268184-2	PIN 1.5	1	PC.
46	1			424026-2	CUSHION	1	PC.
	2			424476-1	CUSHION	1	PC.
C01				878386-8	CARTON FOR DTW450Z	1	PC.
D01				652008-6	PAN HEAD SCREW M3.5X7	4	PC.
D02				654037-5	INSULATED TERM. FT1.25-M3	2	PC.

Item No	Type	Ref	R	Part No	Description	Qty	Unit
ACCESSORIES				**- See catalogue or visit www.makita.ca for more accessories information -**			
A01				---------	BATTERY CHARGER	1	PC.
A02				---------	18V LI-ION BATTERY		
A03				---------	LI-ION BATTERY ACCESSORIES		
A04				141644-8	PLASTIC CARRING CASE COMPLETE	1	PC.
		INC.		163467-4	LATCH	2	PC.
A05				345736-7	HOOK	1	PC.
A06				---------	1/2" IMPACT WRENCH ACCESSORIES		
A07				194485-1	FLAT PIN 4 SET(SEE INSTRUCTION MANUAL 194485-1)	1	PC.
		INC.		268098-5	PIN 4, FLAT HEAD	1	PC.
		INC.		322045-1	CLIP	1	PC.
		INC.		345842-8	HOOK(NOT AVAILABEL AS AN INDIVIDUAL PART)	1	PC.
A08				807N25-7	MODEL NO. LABEL F/DTW450RFE (Added)	1	PC.
				807N39-6	MODEL NO. LABEL F/DTW450RTE (Added)	1	PC.
A09				---------	DEEP DRIVE SOCKETS		
A10				---------	WORK GLOVES		
A11				195871-9	DRILL BIT REMOVER SET	1	PC.