04 -2014
DTW251XRFE, DTW251ZX1
18V 1/2" IMPACT WRENCH (FLAT PIN)

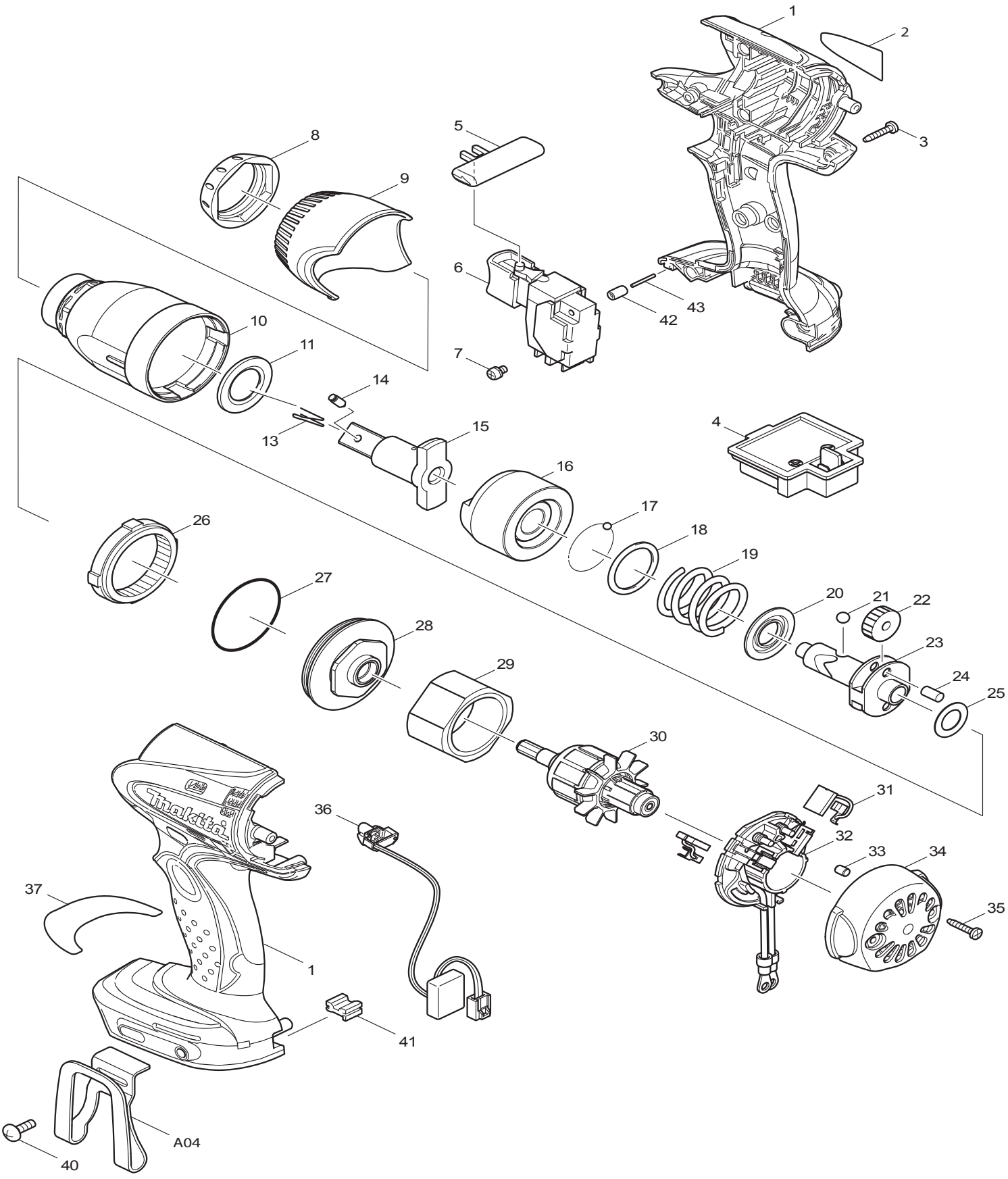

Item No	Type	Ref	Ref Part No	Description	Qty	Unit
1			188243-5	HOUSING SET	1	SET
		INC.	263005-3	RUBBER PIN 6	2	PC.
2			815E48-7	NAME PLATE F/DTW251	1	PC.
3			266130-9	TAPPING SCREW BIND PT 3X16	8	PC.
4			643852-2	TERMINAL	1	PC.
5			419041-9	F/R CHANGE LEVER	1	PC.
6			650652-3	SWITCH TG553FSB-1B	1	PC.
7			652045-0	+PAN HEAD SCREW M3.5X5	2	PC.
8			424375-7	BUMPER	1	PC.
9			452439-7	HAMMER CASE COVER	1	PC.
10			140171-2	HAMMER CASE COMPLETE	1	PC.
11			261116-8	NYLON WASHER 18	1	PC.
13			322045-1	CLIP	1	PC.
14			268098-5	PIN 4 (FLAT HEAD)	1	PC.
		Opt.	323675-1	PIN 4 (ROUND HEAD)	1	PC.
15			324704-3	ANVIL	1	PC.
16			324703-5	HAMMER	1	PC.
17			216001-0	STEEL BALL 3.5	24	PC.
18			267175-0	FLAT WASHER 24	1	PC.
19			234337-5	COMPRESSION SPRING 25	1	PC.
20			267766-7	CUP WASHER 14	1	PC.
21			216011-7	STEEL BALL 5.6	2	PC.
22			227233-4	SPUR GEAR 22	2	PC.
23			324220-5	SPINDLE	1	PC.
24			256253-1	PIN 5	2	PC.
25			267212-0	FLAT WASHER 12	1	PC.
26			227150-8	INTERNAL GEAR 51	1	PC.
27			213507-9	O RING 40	1	PC.
28			158145-9	BEARING BOX COMPLETE	1	PC.
29			638495-3	YORK UNIT	1	PC.
30	1		619253-6	* ARMATURE	1	PC.
	2		619375-2	* ARMATURE	1	PC.
31			196855-0	* CARBON BRUSH CB-448 2PC/SET, W/ ORIGIN	1	SET
32	1		638498-7	* BRUSH HOLDER COMPLETE	1	PC.
	2		632G49-0	* BRUSH HOLDER COMPLETE	1	PC.
		INC.	689181-9	* SPACER (Added -N/A Individually)	2	PC.
		INC.		* Item No. 31		
33			263032-0	RUBBER PIN 4	2	PC.
34			418981-8	REAR COVER	1	PC.
35			266130-9	TAPPING SCREW BIND PT 3X16	2	PC.
36			631693-8	LIGHT CIRCUIT	1	PC.
37			802V69-0	CAUTION LABEL	1	PC.
40			251314-2	+ SCREW M4X12	1	PC.
41			424026-2	CUSHION	1	PC.
42			263036-2	RUBBER PIN 5	1	PC.
43			268184-2	PIN 1.5	1	PC.
C01C			875466-1	CARTON FOR DTW251RFE	1	PC.

Item No	Type	Ref	Ref Part No	Description	Qty	Unit
ACCESSORIES			**- See catalogue or visit www.makita.ca for more accessories information -**			
A01			---------	BATTERY CHARGER		
A02			---------	18V LI-ION BATTERY		
A03			141205-4	PLASTIC CARRYING CASE COMPLETE	1	PC.
		INC.	324207-7	SHAFT	1	PC.
		INC.	413098-2	PLATE	4	PC.
		INC.	417724-5	LATCH	2	PC.
		INC.	419215-2A	PLASTIC CASE LID, TAB TYPE	1	PC.
		INC.	419216-0	HANDLE	1	PC.
A03A		1	142146-7	PLASTIC CARRYING CASE COMPLETE (N/A)	1	PC.
			802T33-9	DTW251RFE MODEL NO. LABEL (N/A)	1	PC.
		2	824812-5	PLASTIC CARRYING CASE COMPLETE	1	PC.
A04			346449-3	HOOK F/ 14.4, 18V BATTERIES	1	PC.
A05			---------	LI-ION BATTERY ACCESSORIES		
A06			---------	1/2" IMPACT WRENCH ACCESSORIES		
A07			194485-1	FLAT PIN 4 SET(SEE INSTRUCTION MANUAL 194485-1)	1	PC.
		INC.	268098-5	PIN 4, FLAT HEAD	1	PC.
		INC.	322045-1	CLIP	1	PC.
		INC.	345842-8	HOOK(NOT AVAILABEL AS AN INDIVIDUAL PART)	1	PC.
A08			---------	DEEP DRIVE SOCKETS		
A09			---------	WORK GLOVES		

SERVICE CHANGES

1. Changes on Armature

(T/I# A7514)

Item No.	Description	Type 1	Type 2
30	Armature	619253-6	619375-2

Type 1 Type 2

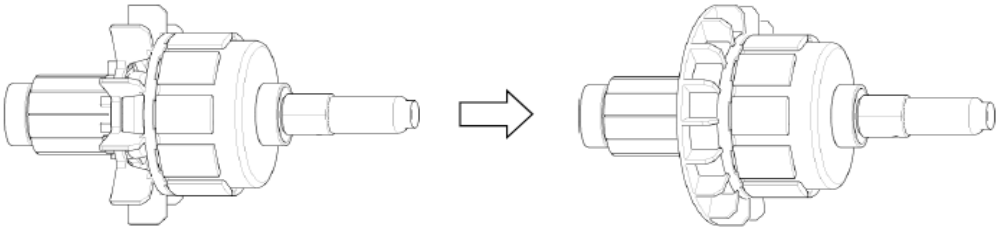

2. Changes on Brush Holder Complete

(TI# B1033)

Item No.	Description	Type 1	Type 2
31	Carbon Brush	196855-0	196855-0 Inc. in No. 32
32	Brush Holder Complete	638498-7	632G49-0
Inc.	Spacer	----------	689181-9 (N/A individually)

Above parts are completely interchangeable as a set.

