02 - 2014

DGD800F, DGD800RFE, DGD800Z
18V 1/4” DIE GRINDER

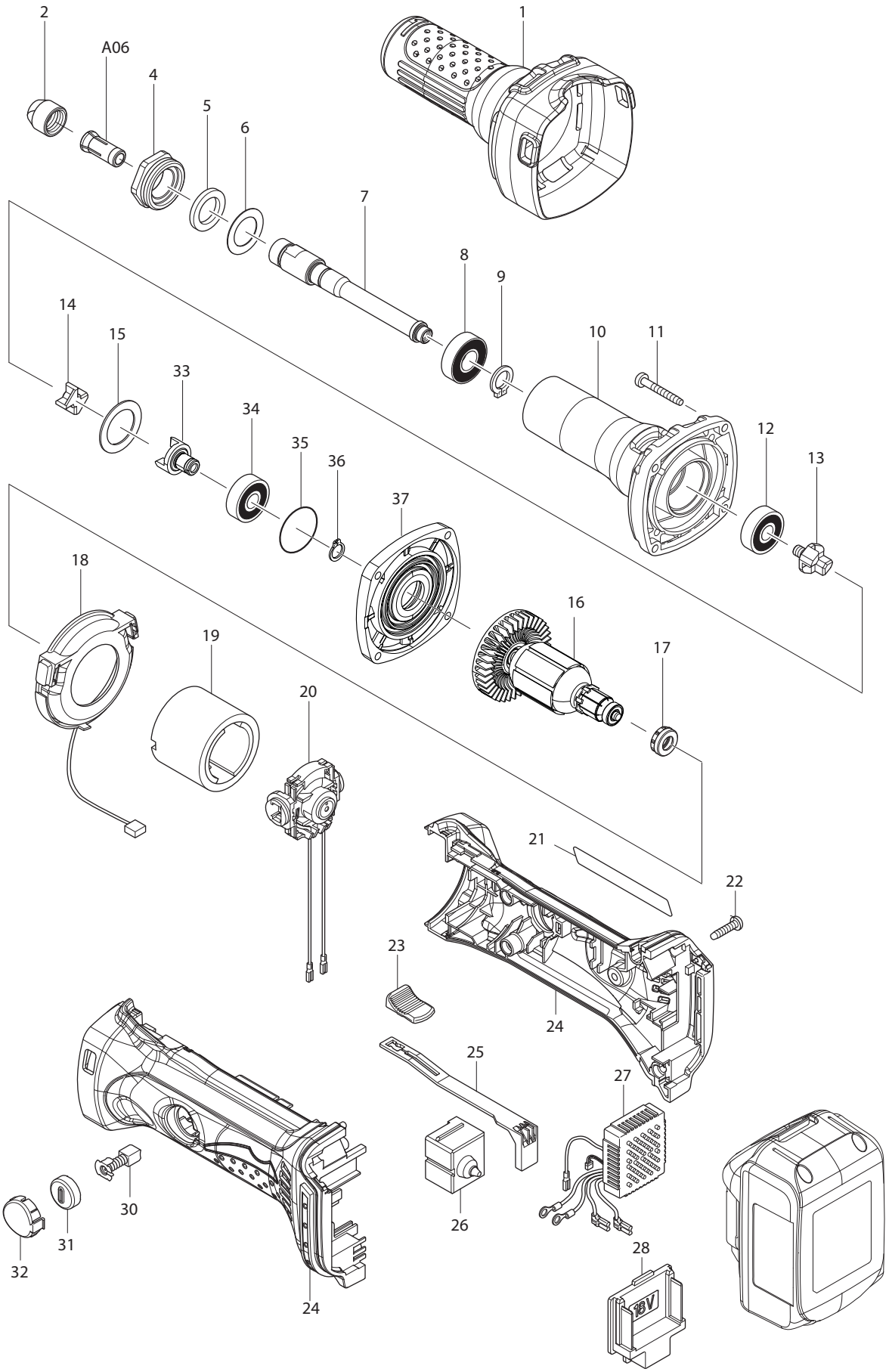

Item No	Type	Part No		Description	Qty	Unit
1		424380-4		INSULATION COVER	1	PC.
2		763668-0		COLLET NUT	1	PC.
4		317999-5		BEARING RETAINER	1	PC.
5		443124-3		FELT RING 17	1	PC.
6		267329-9		FLAT WASHER 18	1	PC.
7		326010-2		SPINDLE	1	PC.
8		210106-8		BALL BEARING 6001LLB	1	PC.
9		961052-5		RETAINING RING S-12	1	PC.
10		318000-9		BARREL	1	PC.
11		266361-0		TAPPING SCREW 4X30	4	PC.
12		210042-8		BALL BEARING 629LLB	1	PC.
13		324639-8		COUPLING	1	PC.
14		421942-9		SPACER	1	PC.
15		267126-3		FLAT WASHER 22	1	PC.
16		619284-5		ARMATURE	1	PC.
16	INC.			Item No. 17		
17		421977-0		RUBBER RING 13	1	PC.
18		631714-6		LED CIRCUIT	1	PC.
19		638627-2		YOKE UNIT	1	PC.
20		638448-2		ENDBELL COMPLETE	1	PC.
21		815P35-2		NAME PLATE F/DGD800	1	PC.
22		266326-2		TAPPING SCREW 4X18	5	PC.
23		419566-3		SWITCH KNOB	1	PC.
24		187839-9		HOUSING SET	1	SET
	INC.	263005-3		RUBBER PIN 6	2	PC.
25		419519-2		SWITCH LEVER	1	PC.
26		650579-7		SWITCH 1246.3223	1	PC.
27		620243-4		CONTROLLER	1	PC.
28		644808-8		TERMINAL	1	PC.
30		195018-5		CARBON BRUSH CB-430 2PC/SET	1	SET
31		643929-3		BRUSH HOLDER CAP	2	PC.
32		419518-4		HOLDER CAP COVER	2	PC.
33		326009-7		COUPLING	1	PC.
34		210042-8		BALL BEARING 629LLB	1	PC.
35		213445-5		O-RING 26	1	PC.
36		961005-4		RETAINING RING S-9	1	PC.
37		317821-6		GEAR HOUSING COVER	1	PC.
100		652044-2		+BIND SCREW M3.5X5.0	2	PC.
E01		803Y13-8	*	CAUTION LABEL (Old Type)	1	PC.
E02		812D61-0	*	CAUTION LABEL	1	PC.
E03		812D62-8	*	CAUTION LABEL	1	PC.
ACCESSORIES		**- See Catalogue or visit www.makita.ca for more accessories -**				
A01		781039-9		WRENCH 13	2	PC.
A02		---------		LI-ION BATTERY ACCESSORIES		
A02		450128-8		BATTERY COVER	1	PC.
A03		---------		BATTERY CHARGER		
A03		DC18RC		DC18RC FAST CHARGER	1	PC.
A04		---------		18V LI-ION BATTERY		
A04		194205-3		BATTERY BL1830 SET	2	PC.
A05		141482-8		PLASTIC CASE COMPLETE	1	PC.
	INC.	162315-4		LATCH	2	PC.
A06		763673-7		COLLET CONE 1/4"	1	PC.
		763672-9		COLLET CONE 1/8"	1	PC.
A06		----------		DIE GRINDER ACCESSORIES		
A07		----------		ABRASIVE FLAP WHEELS		
		B-37172		1" X 1" X 1/4" A60 FLAP WHEEL	1	PC.

SERVICE CHANGES

1. Changes on Caution labels

(TI#B5522)

Item No.	Description	Type 1	Type 2
E01	CAUTION LABEL	803Y13-8	----------
E02	CAUTION LABEL	----------	812D61-0
E03	CAUTION LABEL	----------	812D62-8

Above parts are completely interchangeable as a set.

Current Caution label (803Y13-8)

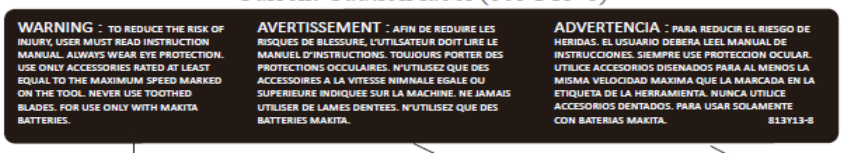

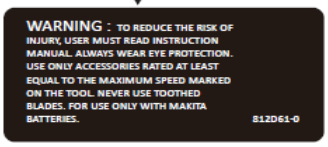

New Caution label (812D61-0)

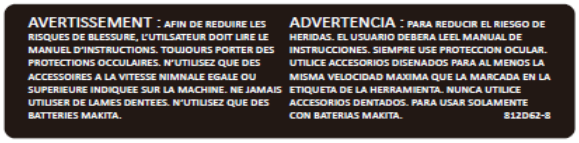

New Caution label (812D62-8)