# 11 - 2013
# DFS451RFE, DFS451Z, DFS451F
# 18V DRYWALL SCREWDRIVER

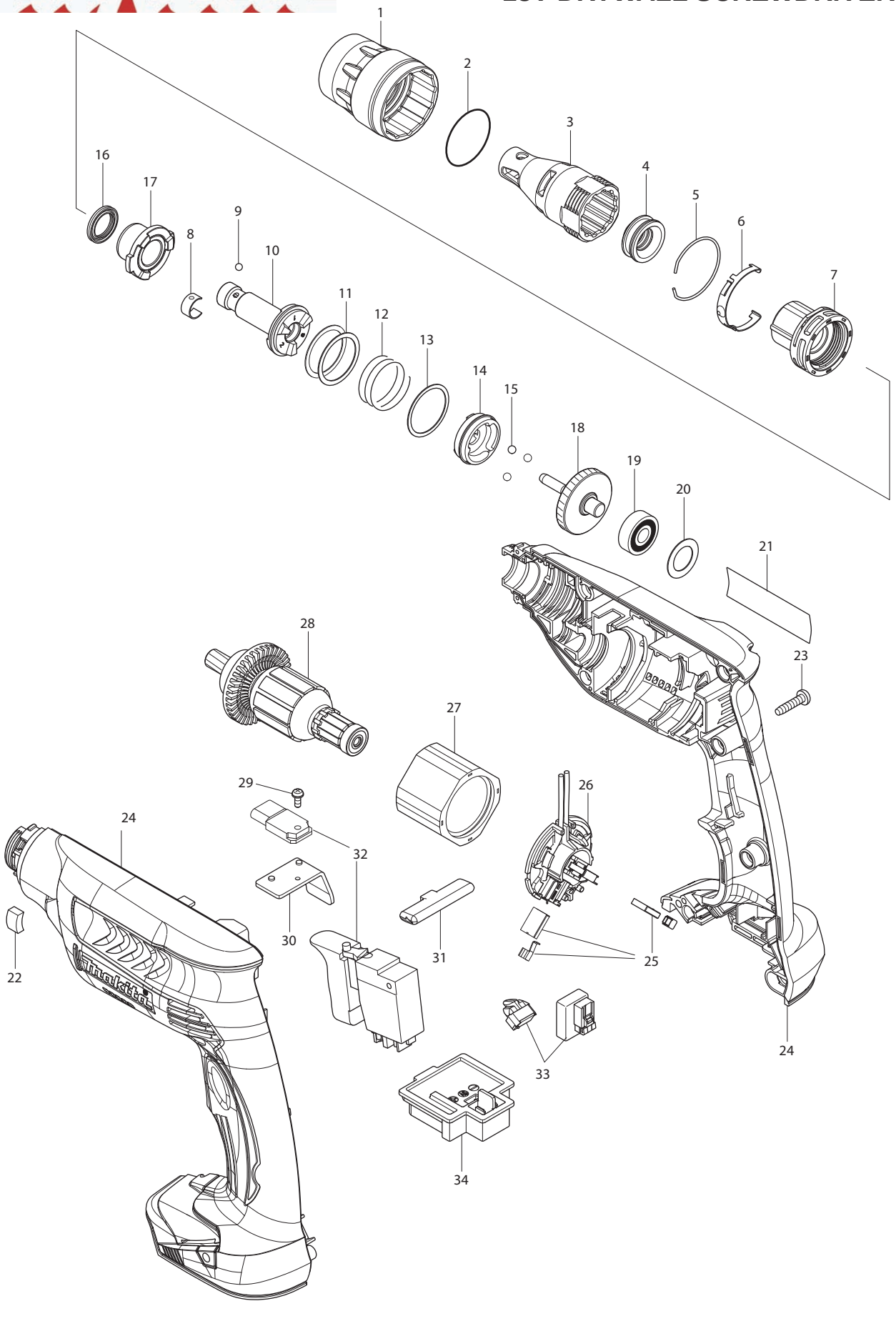

| Item No | Type | Ref | Part No | | Description | Qty | Unit |
|---|---|---|---|---|---|---|---|
| 001 | 2 | | 455591-0 | | LOCK RING | 1 | PC. |
| 002 | | | 424235-3 | | SEAL RING 30 | 1 | PC. |
| 003 | | | 158876-0 | | LOCATOR L COMPLETE | 1 | PC. |
| | Opt 2 | | 197024-6 | | LOCATOR L ASSEMBLY | 1 | PC. |
| | | INC. | | | Item No. 1, 2 , 3, 4 | | |
| 004 | | | 424163-2 | | DUST SEAL SLEEVE | 1 | PC. |
| 005 | | | 234266-2 | | RING SPRING 33 | 1 | PC. |
| 006 | | | 232245-4 | | LEAF SPRING | 1 | PC. |
| 007 | | | 141100-8 | | LOCATOR BASE COMPLETE | 1 | PC. |
| 008 | | | 232050-9 | | LEAF SPRING | 1 | PC. |
| 009 | | | 216001-0 | | STEEL BALL 3.5 | 1 | PC. |
| 010 | | | 140771-8 | | SPINDLE 125S COMPLETE | 1 | PC. |
| 011 | | | 267331-2 | | FLAT WASHER 25 | 2 | PC. |
| 012 | | | 234017-3 | | COMPRESSEION SPRING 25 | 1 | PC. |
| 013 | | | 267332-0 | | FLAT WASHER 26 | 1 | PC. |
| 014 | | | 223170-0 | | CLUTCH CAM 125S | 1 | PC. |
| 015 | | | 216008-6 | | STEEL BALL 4 | 3 | PC. |
| 016 | | | 213184-7 | | X-RING 14 | 1 | PC. |
| 017 | | | 142306-1 | | BEARING COMPLETE | 1 | PC. |
| 018 | | | 140772-6 | | GEAR COMPLETE | 1 | PC. |
| 019 | 2 | | 210029-0 | | BALL BEARING 608ZZ | 1 | PC. |
| 020 | | | 253192-6 | | FLAT WASHER 14 | 1 | PC. |
| 021 | | | 815G48-9 | | NAME PLATE F/DFS451 | 1 | PC. |
| 022 | | | 423413-2 | | RUBBER PLATE | 1 | PC. |
| 023 | | | 265995-6 | | TAPPING SCREW 4X18 | 7 | PC. |
| | | INC. | 263005-3 | | RUBBER PIN 6 | 2 | PC. |
| | | INC. | 802Y67-2 | | CAUTION LABEL | 1 | PC. |
| 024 | | | 187854-3 | | HOUSING SET | 1 | SET |
| 025 | | | 195021-6 | | CARBON BRUSH CB-440 2PC/SET W/ ORIGIN | 1 | SET |
| 026 | | | 638748-0 | | BRUSH HOLDER COMPLETE | 1 | PC. |
| 027 | | | 638426-2 | | YOKE UNIT | 1 | PC. |
| 028 | 2 | | 619351-6 | * | ARMATURE | 1 | PC. |
| 029 | | | 911006-2 | | PAN HEAD SCREW M3X8 | 1 | PC. |
| 030 | | | 689150-0 | | HEAT SINK | 1 | PC. |
| 031 | | | 452516-5 | | F/R CHANGE LEVER | 1 | PC. |
| 032 | | | 650657-3 | | SWITCH TG553FSB-9B | 1 | PC. |
| 033 | | | 620030-1 | | LIGHT CIRCUIT | 1 | PC. |
| 034 | | | 643852-2 | | TERMINAL | 1 | PC. |
| 037E | | | 267104-3 | | FLAT WASHER 12 | 1 | PC. |
| 100 | | | 266622-8 | | + TRUSS HEAD SCREW M4X12 (F/Hook) | 1 | PC. |
| 101 | | | 652045-0 | | + PAN HEAD SCREW M3.5X5 (F/Switch) | 2 | PC. |
| **ACCESSORIES** | | | **- See catalogue or visit www.makita.ca for more accessories -** | | | | |
| A01 | | | ---------- | | LI-ION BATTERY ACCESSORIES | | |
| A02 | | | 346449-3 | | HOOK | 1 | PC. |
| A03 | | | 784261-7 | | + BIT 2-25 | 2 | PC. |
| | | | B-24125 | | DRIVER BIT PH2 1" 3/SET | 1 | SET |
| | | | B-24935 | | DRIVER BIT PH2 1" 100/SET IN JAR | 1 | SET |
| | | | B-25018 | | DRIVER BIT PH2 1" 100/SET IN BAG | 1 | SET |
| | | | A-96469 | | IMPACTX BIT PH2 1" 2/SET | 1 | SET |
| | | | A-96475 | | IMPACTX BIT PH2 1" 50/SET IN BAG | 1 | SET |
| A04 | | | 784801-1 | | MAGNETIC BIT HOLDER 6.35-76 | 1 | PC. |
| | | | A-96942 | | IMPACTX MAGNETIC BIT HOLDER 3" | 1 | PC. |
| | | | A-96992 | | IMPACTX MAGNETIC BIT HOLDER 3" | 1 | PC. |
| | | | A-99281 | | IMPACTX MAGNETIC BIT HOLDER 3" 10/SET | 1 | SET |
| | | | A-99312 | | IMPACTX MAGNETIC BIT HOLDER 3" 10/SET | 1 | SET |

| Item No | Type | Ref | Part No | Description | Qty | Unit |
|---|---|---|---|---|---|---|
| A05 | | | 784807-9 | MAGNETIC BIT HOLDER 6.35-60 | 1 | PC. |
| | | | B-52451 | MAGNETIC BIT HOLDER 2-3/8" | 1 | PC. |
| | | | A-96920 | IMPACTX MAGNETIC BIT HOLDER 2-3/8" | 1 | PC. |
| | | | A-96970 | IMPACTX 1PC MAGNETIC BIT HOLDER 2-3/8" | 1 | PC. |
| | | | A-96936 | IMPACTX MAGNETIC BIT HOLDER 2-3/8" | 1 | PC. |
| | | | A-96986 | IMPACTX 1PC MAGNETIC BIT HOLDER 2-3/8" 10/SE IN BAG | 1 | SET |
| A06 | | | B-45076 | MAGNETIC NUTSETTER 1/4" | 1 | PC. |
| | | | A-97112 | IMPACTX MAGNETIC NUTSETTER 1/4" | 1 | PC. |
| | | | A-97128 | IMPACTX MAGNETIC NUTSETTER 1/4" 10/SE IN BAG | 1 | PC. |
| A07 | | | B-45082 | MAGNETIC NUTSETTER 5/16" | 1 | PC. |
| | | | A-97162 | IMPACTX MAGNETIC NUTSETTER 5/16" | 1 | PC. |
| | | | A-97178 | IMPACTX MAGNETIC NUTSETTER 5/16" 10/SE IN BAG | 1 | SET |
| A08 | | | B-45098 | MAGNETIC NUTSETTER 3/8" | 1 | PC. |
| | | | A-97215 | IMPACTX MAGNETIC NUTSETTER 3/8" | 1 | PC. |
| | | | A-97221 | IMPACTX MAGNETIC NUTSETTER 3/8" 10/SE IN BAG | 1 | SET |
| A09 | | | B-45107 | MAGNETIC NUTSETTER 7/16" | 1 | PC. |
| | | | A-97259 | IMPACTX MAGNETIC NUTSETTER 7/16" | 1 | PC. |
| | | | A-99493 | IMPACTX MAGNETIC NUTSETTER 7/16 10/SE IN BAG | 1 | SET |
| A10 | | | 141490-9 | PLASTIC CARRYING CASE COMPLETE | 1 | PC. |
| | | INC. | 162315-4 | LATCH | 2 | PC. |
| | | INC. | 452137-3 | HANDLE | 1 | PC. |
| A11 | | | ---------- | BATTERY CHARGER | | |
| A12 | | | --------- | 18V LI-ION BATTERY | | |

**SERVICE CHANGES**

**1. Changes on Gear Case Assembly** (TI#A3411)

| Item No. | Description | Type 1 | Type 2 |
|---|---|---|---|
| 28 | Armature | 619277-2 | 619351-6 |
| 37 | Flat washer 12 | ---------- | 267104-3 |

Above parts are completely interchangeable as a set.

Type 1 Type 2

