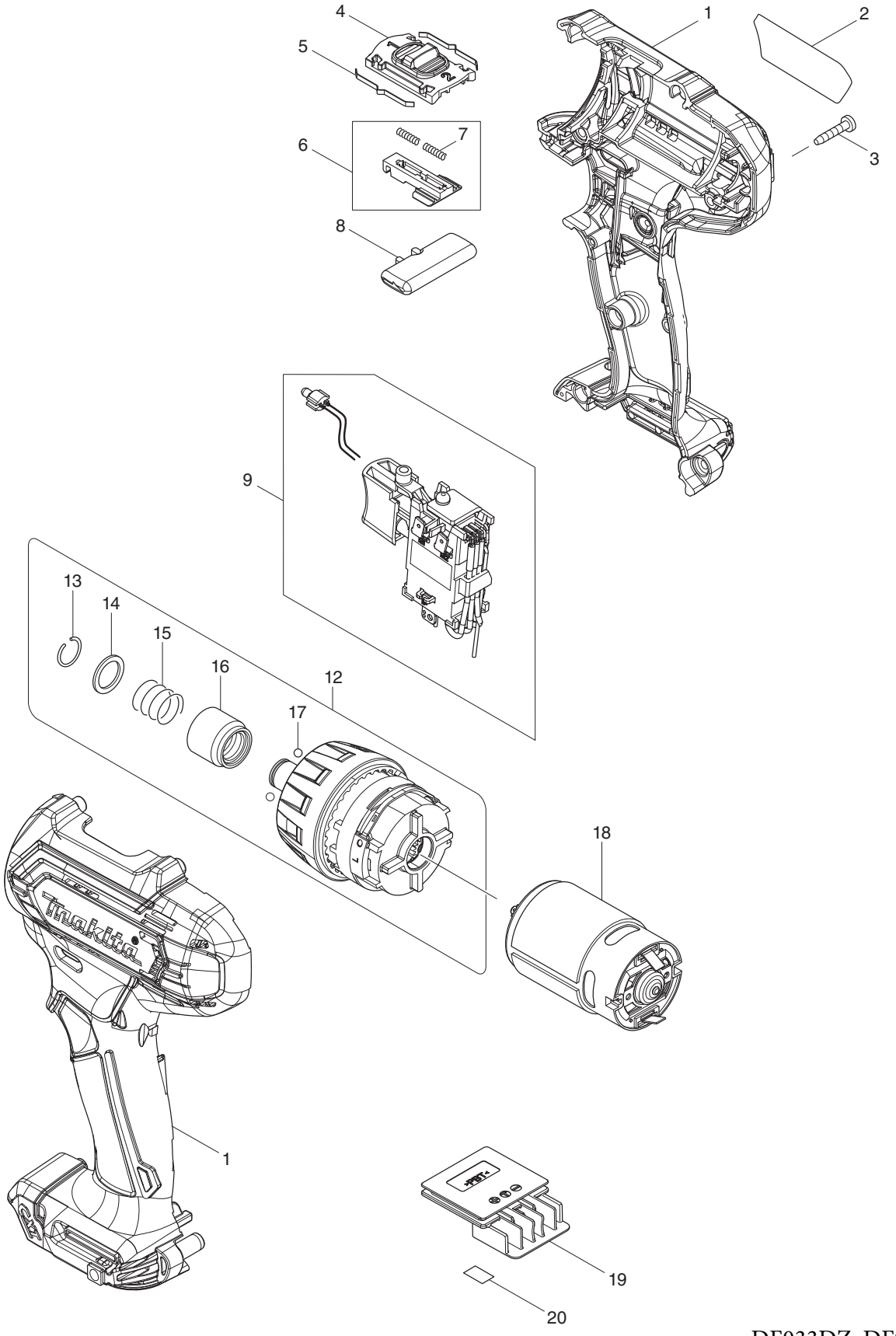

DF033DZ, DF033DWYE

Item No.	Type	Sub	Part No.	Description	Qty	Unit
001			183K90-5	HOUSING SET	1	PC.
		INC.	252126-6	HEX. LOCKING NUT M4-7	2	PC.
002			855E57-4	DF033D NAME PLATE	1	PC.
003			266429-2	TAPPING SCREW 3X16	9	PC.
004			459026-3	SPEED CHANGE LEVER	1	PC.
005			232493-5	LEAF SPRING	2	PC.
006			127127-2	CHANGE LEVER ASSEMBLY	1	PC.
		INC.		Item No. 7		
007			233025-1	COMPRESSION SPRING 2	2	PC.
008			456039-5	F/R CHANGE LEVER	1	PC.
009			632J77-3	SWITCH UNIT	1	PC.
		INC.	620625-0	LED CIRCUIT	1	PC.
012			127126-4	GEAR ASSEMBLY	1	PC.
		INC.		Item No. 13-17		
013			231965-7	RING SPRING 10	1	PC.
014			347004-4	BIT WASHER	1	PC.
015			233005-7	COMPRESSION SPRING 13	1	PC.
016			326677-6	BIT SLEEVE	1	PC.
017			216019-1	STEEL BALL 3	2	PC.
018			629395-8	DC MOTOR	1	PC.
019			644813-5	TERMINAL	1	PC.
020			855E64-7	DF033D SERIAL NO. LABEL	1	PC.
100			251314-2	+ SCREW M4X12 F/HOOK	1	PC.
ACCESSORIES			**- Visit www.makita.ca for more accessories information -**			
A02			346909-5	HOOK	1	PC.
A03			784244-7	+ BIT 2-50	1	PC.
A04			821661-1	PLASTIC CARRYING CASE	1	PC.
		INC.	417724-5	LATCH	2	PC.
A08			456128-6	BATTERY COVER	1	PC.
A09			DC10WD	DC10WD BATTERY CHARGER	1	PC.
A10			---	12V MAX LI-ION SLIDE BATTERY	2	PC.
A11			168467-9	HOLSTER	1	PC.
A12			452947-8	BIT HOLDER	1	PC.