makita®

07 - 2015
DDF482RFE / DDF482SYE / DDF482Z
18V LXT 1/2" Driver Drill

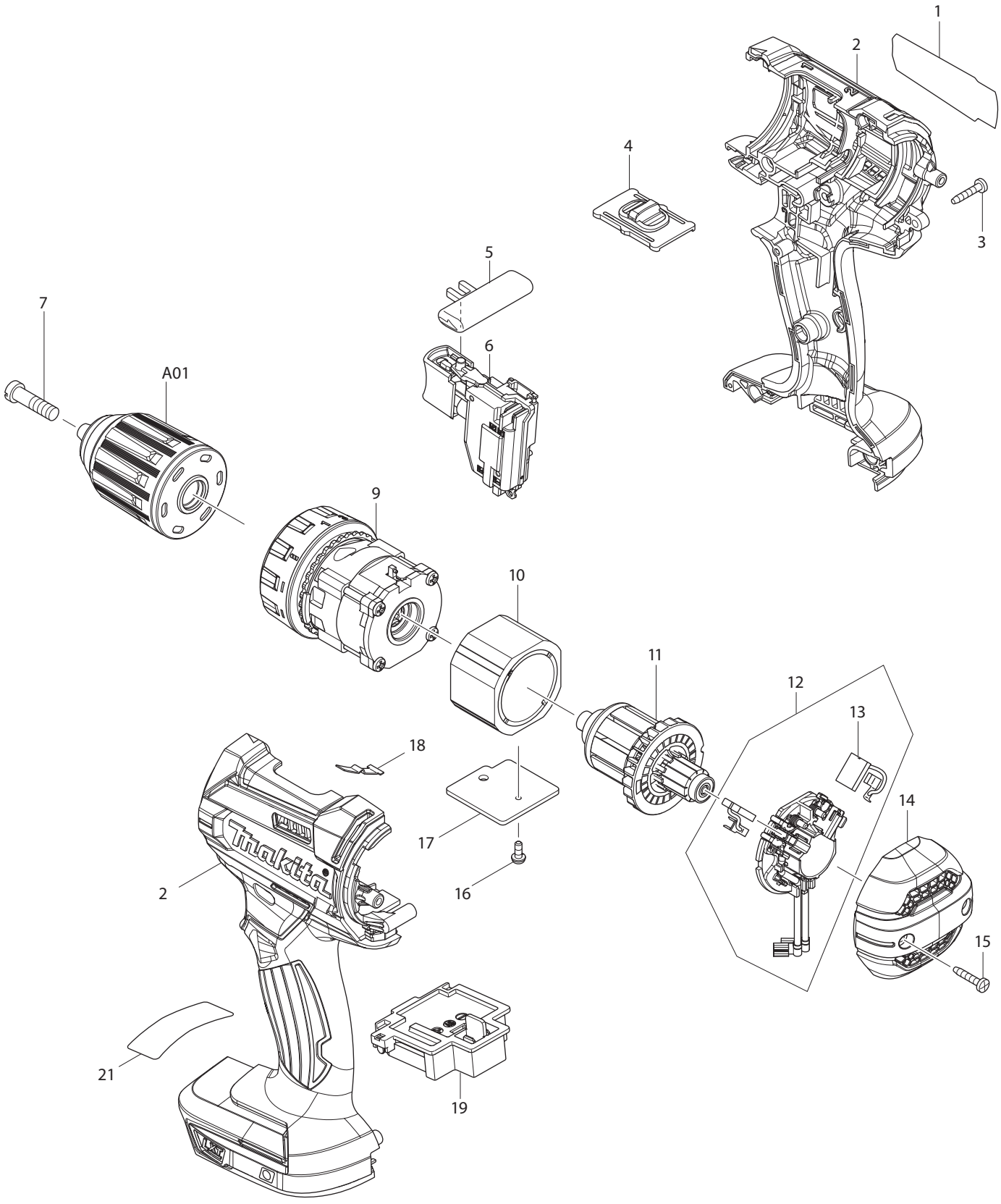

Item No.	Type	Sub	Part No.	Description	Qty	Unit
1			851E35-2	NAME PLATE F/DDF482	1	PC.
2			183B65-0	HOUSING SET	1	PC.
		INC.	263005-3	RUBBER PIN 6	2	PC.
3			266429-2	TAPPING SCREW 3X16	9	PC.
4			123442-2	SPEED CHANGE LEVER ASSEMBLY	1	PC.
		INC.	233438-6	COMPRESSION SPRING 4	2	PC.
5			419041-9	F/R CHANGE LEVER	1	PC.
6			650753-7	SWITCH	1	PC.
		INC.	620444-4	LED CIRCUIT	1	PC.
7			251468-5	- FLAT HEAD SCREW M6X22	1	PC.
9			123444-8	GEAR ASSEMBLY	1	PC.
10	2		632J70-7	YOKE UNIT	1	PC.
11			619380-9	ARMATURE	1	PC.
12			632F22-4	BRUSH HOLDER COMPLETE	1	PC.
		INC.		Item No. 13		
13			195021-6	CARBON BRUSH CB-440 2PC/SET W/ORIGIN	1	SET
14			456099-7	REAR COVER	1	PC.
15			266429-2	TAPPING SCREW 3X16	2	PC.
16	2		652066-2	+PAN HEAD SCREW M3X9 W/WASHER	1	PC.
17			689070-8	HEAT SINK	1	PC.
18			232182-2	LEAF SPRING	1	PC.
19			644808-8	TERMINAL	1	PC.
21			806Y20-0	CAUTION LABEL	1	PC.
100			251314-2	+ SCREW M4X12 F/HOOK (Item No. A02)	1	PC.
ACCESSORIES			**- Visit www.makita.ca for more accessories information -**			
A01			766027-7	KEYLESS DRILL CHUCK 13	1	PC.
A02			346449-3	HOOK	1	PC.
A03			784637-8	+- BIT 2-45	1	PC.
A04			141856-3	PLASTIC CARRYING CASE COMPLETE	1	PC.
		INC.	162302-3	LATCH	2	PC.
		INC.	324207-7	SHAFT	1	PC.
		INC.	451749-9	HANDLE	1	PC.
A04A			824812-5	PLASTIC CARRYING CASE	1	PC.
A05			---	LI-ION BATTERY ACCESSORIES		
			450128-8	BATTERY COVER	1	PC.
A06			---	BATTERY CHARGER		
A07			---	18V LI-ION BATTERY		
A09			452947-8	BIT HOLDER	1	PC.