Installation / Maintenance Instructions
Auto Drain Valve

Prod. No. 408891, 408892, 408893, 408894

Specifications

Model	ADVM	ADVI	ADVS	ADVH
Suitable for Filter and FRC units of size	1/8, 1/4, 3/8, 1/2 NPT			
Medium	Compressed air			
Operating pressure	140 PSI (10 Bar)			
Ambient temperature	5° - 60° C (41° - 140° F)			
Installation	Vertical (as in the picture)			
Materials of construction	Brass, Acetal, Stainless Steel, Nitrile			

Function

- The Auto Drain Valve is an open, float type, externally mountable unit on 1/8", 1/4", 3/8", 1/2" Filters and FRC units
- The valve closes at and above 29 PSI (2 bar), when the water level increases, the drain passage opens thus draining the condensate water.
- When the condensate level decreases the drain passage closes.

Installation Instructions

To dismantle the existing manual drain valve from Filter / FRC unit: (Ref: FIG.1)

1) Completely exhaust the air in the pipe line.
2) Remove the bowl assembly from the filter housing.
3) Hold the gland using a socket (12mm for 1/4" and 3/8" and 14mm for 1/2") and unscrew the stem housing assembly.
4) Now remove the stem housing assembly and its gland assembly fully from the bowl.

To assemble the Auto Drain Valve

1) To assemble the gland assembly onto the filter bowl: (Ref: FIG.2)

a) Keep the 'O' ring in place.
b) Position the adaptor nipple from outside, through the filter bowl and bowl guard.
c) Position the socket over the nut and gently press it to hold the nut firmly (Ref: FIG.3).
d) Hold the adaptor nipple with a wrench (19mm for 1/4" and 3/8" and 22mm for 1/2"). Now place the nut over the adaptor nipple and tighten the nut. (Ref: FIG. 4)

2) To assemble the gland assembly onto the filter bowl: (Ref: FIG.5).

a) Slide the auto drain tube through the gland assembly, taking care not to bend the tube.
b) Tighten the auto drain unit onto the adaptor nipple by hand and ensure the "O" ring is in place.
c) Position the bowl filter through the auto drain tube (Ref: FIG.6). A flexible plastic hose can be connected to the hose connector to drain the water away from the workplace (Ref: FIG.5).

Routine Maintenance Instructions

Check for water level in the filter bowl daily.

Note:

There will be no water seen in the filter bowl when the auto drain valve is functioning properly.

Installation / Maintenance Instructions
Auto Drain Valve

Installation procedure for dismantling manual drain valve & mounting auto drain valve in Filter & FRC units

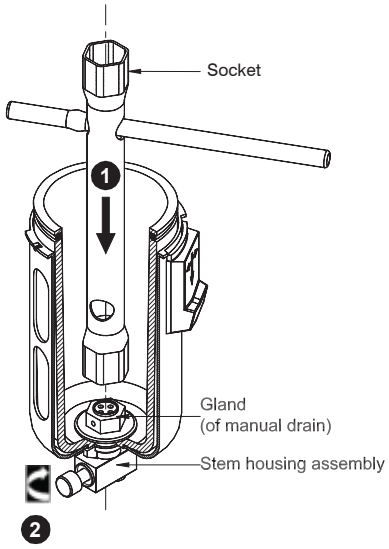

FIG. 1
Removal of manual drain valve assembly

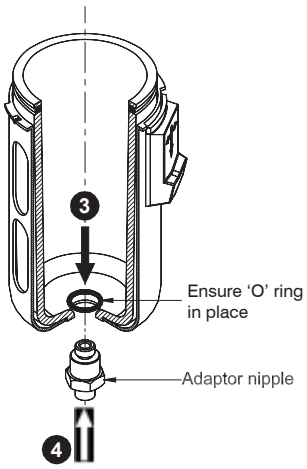

FIG. 2
Positioning the Adaptor nipple

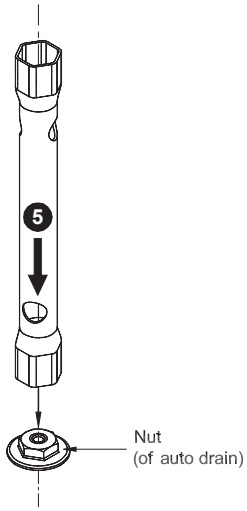

FIG. 3
Positioning of nut with socket

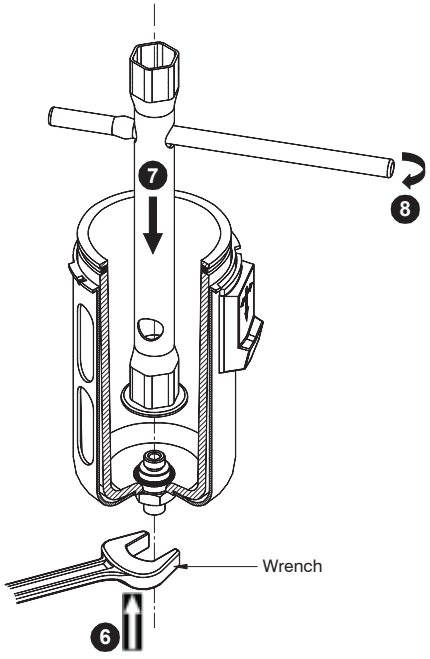

FIG. 4
Gland assembly

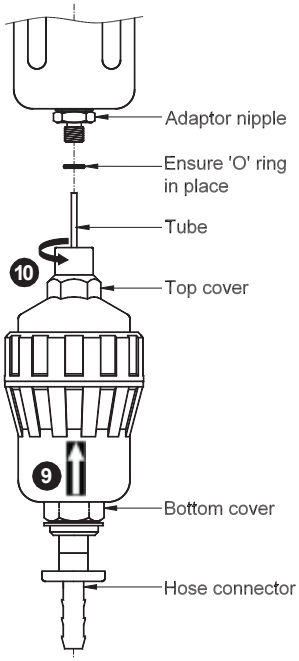

FIG. 5
Mounting the auto drain unit (Hand tightened)

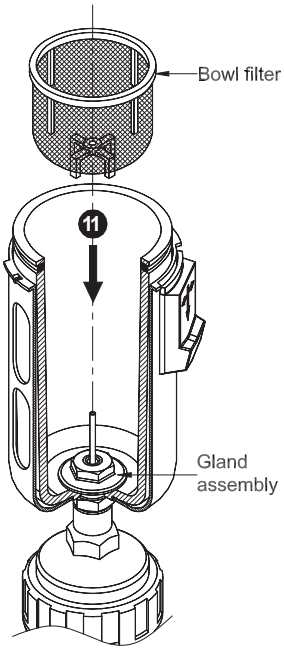

FIG. 6
Positioning the bowl filter inside the bowl on to the tube

0 numbers within the circle indicates the assembly sequence

Spare Parts List

Description	Ordering no. for		
	ADVI	ADVS	ADVH
Auto drain unit	NA100	NA100	NA100
Gland assembly	LA2003	LA2004	LA2005
Bowl filter	752002	752003	752004

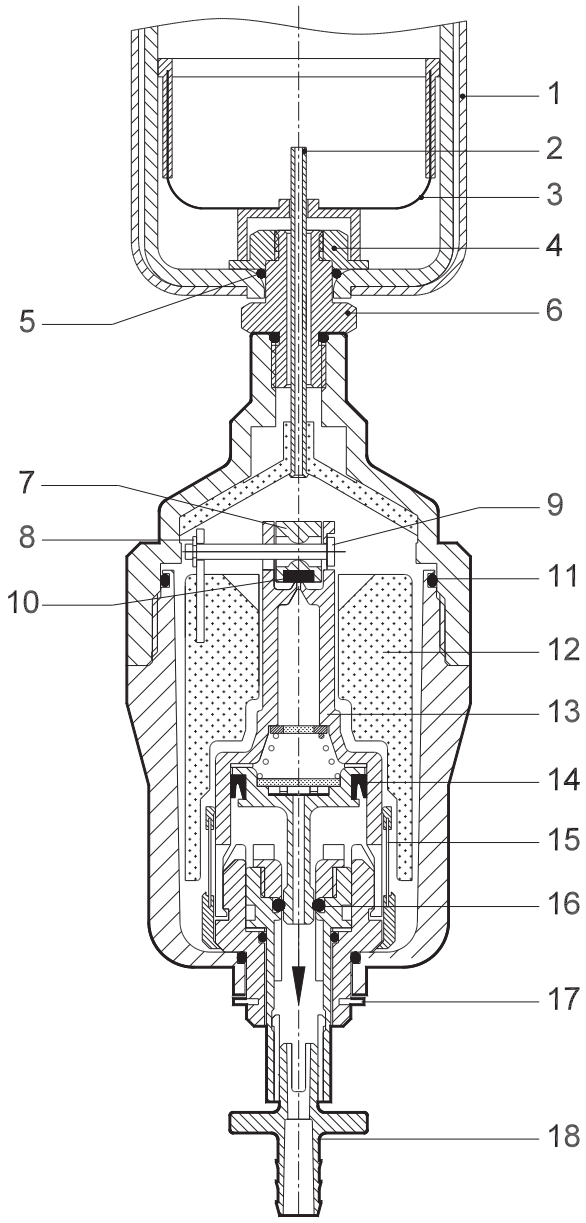

FIG. 7

Pour l'information en français, visitez notre site Web : www.jetequipment.com/fr/

Trouble shooting

Trouble	Cause	Solution
1. No draining of water (water level seen in bowl)	1. Bowl Filter (3) clogged	Clean* & use
	2. Drain Filter mesh (15) clogged	Clean* & use
	3. Hole in the drain housing (13) (valve seat area) gets clogged	Clean* the valve seat area (10)
2. Continuous flow of air / water	1. Piston gets stuck	Clean* the Nutring area (14) and 'O' ring (16) area.

* Clean using air and soap water.

Dismantling / Assembly Instructions (Ref: FIG. 7)

1) Dismantling Instructions:

a) Completely exhaust the air in the pipe line.

b) **To dismantle the auto drain unit from the bowl:**
Hold the adaptor nipple (6) using a wrench (19mm for 1/4" and 3/8" and 22mm for 1/2"), and unscrew the auto drain unit from the filter bowl by hand.

c) **To dismantle the auto drain unit:**
Hold the top and bottom covers with wrenches (7mm and 22mm respectively) and unscrew the bottom cover.

d) **To remove the float and valve cone complete:**
i) Remove the gland clip (17) and remove the float assembly from the bottom cover.
ii) Remove the clip (8) and cross pin (9) to dismantle float (12).
iii) Remove valve cone complete (7).

2) Assembly Instructions:

a) Ensure all components are clean and dirt free.

b) Apply general purpose grease on all "O" rings and sealing areas.

c) **To assemble the valve cone complete and float:**

i) Position the valve cone complete (7) in place.

ii) Assemble the cross pin (9) and clip (8), to mount the float (12) on the valve.

d) **To assemble the auto drain unit:**
Keeping the float unit inside the bottom cover with gland clip (17) in position, assemble the top cover and bottom covers together ensuring proper positioning of "O" ring (11).

e) Assemble the auto drain unit as given under the installation instructions in this manual.

How to order for spare parts

Mention the spare parts numbers as given in the spare parts list table.
Example: bowl filter for 1/4" size: Ordering No.: 752002.

Subject to change