Installation / Operating / Maintenance Instructions
Filter - Regulator - Lubricator, Modular

Prod. No. 408857, 408858

Specifications

This modular FRLM unit consists of a filter regulator combination and lubricator, assembled using a piping adaptor (1), wall mounting bracket (7) etc.

For details of (a) specifications, (b) installation, (c) operating and (d) maintenance, refer to the instruction sheets of the individual items.

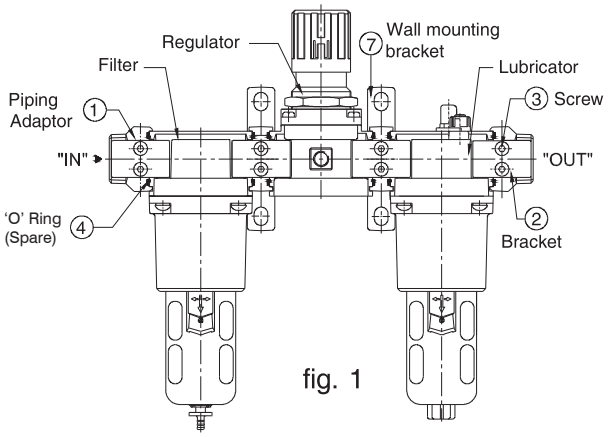

fig. 1

Model No	Port size	Filter Model No	Regulator Model No	Lubricator Model No	Piping Adaptor assembly	Wall mounting bracket assembly
AFRLMH34	3/4"	AFH34	ARH34	ALH34	A2P07	A2W04
AFRLMH1	1"	AFH1	ARH1	ALH1	A2P08	A2W04

Important

Since this equipment is used in compressed air line, proper precautions are to be taken for safety.

Installation of Modular unit

1. Dismantle the Piping adaptor (1) from the assembly.
2. Assemble the Piping adaptor on to the rigid pipeline OR to the threaded fitting (as the case may be) using correct wrench.
3. Reassemble the Modular units by stacking and tightening the screws.

Caution : When the pipes or fittings are assembled on the modular unit, without removing the piping adaptor from the assembly, ensure the following:

(a). Hold the Piping Adaptor (1) using correct size wrench and tighten the pipes or fittings at both ends.

(b). Ensure that the tightening load is NOT transmitted to the FRL assembly otherwise the guide ribs provided in the Spacers and Piping Adaptors may be damaged.

Removal of the individual unit from the line

1. Remove the screws (3) and brackets (2) adjacent to the unit to be removed.
2. Pull out the unit by sliding away from the line.

Reassembly of the unit

1. Apply NLGI Grade 2 grease on the surface of the 'O' ring (4) and on the sliding faces.
2. Reassemble the unit by sliding between the guide ribs.
3. Tighten the brackets (2) using the screws (3).

How to order spare parts:

Mention the spare parts and model numbers as given in the tables.
Example: 'O' ring 650107 for AFRLMH1

Subject to change

Assembly / Spare Parts List
Filter - Regulator - Lubricator, Modular

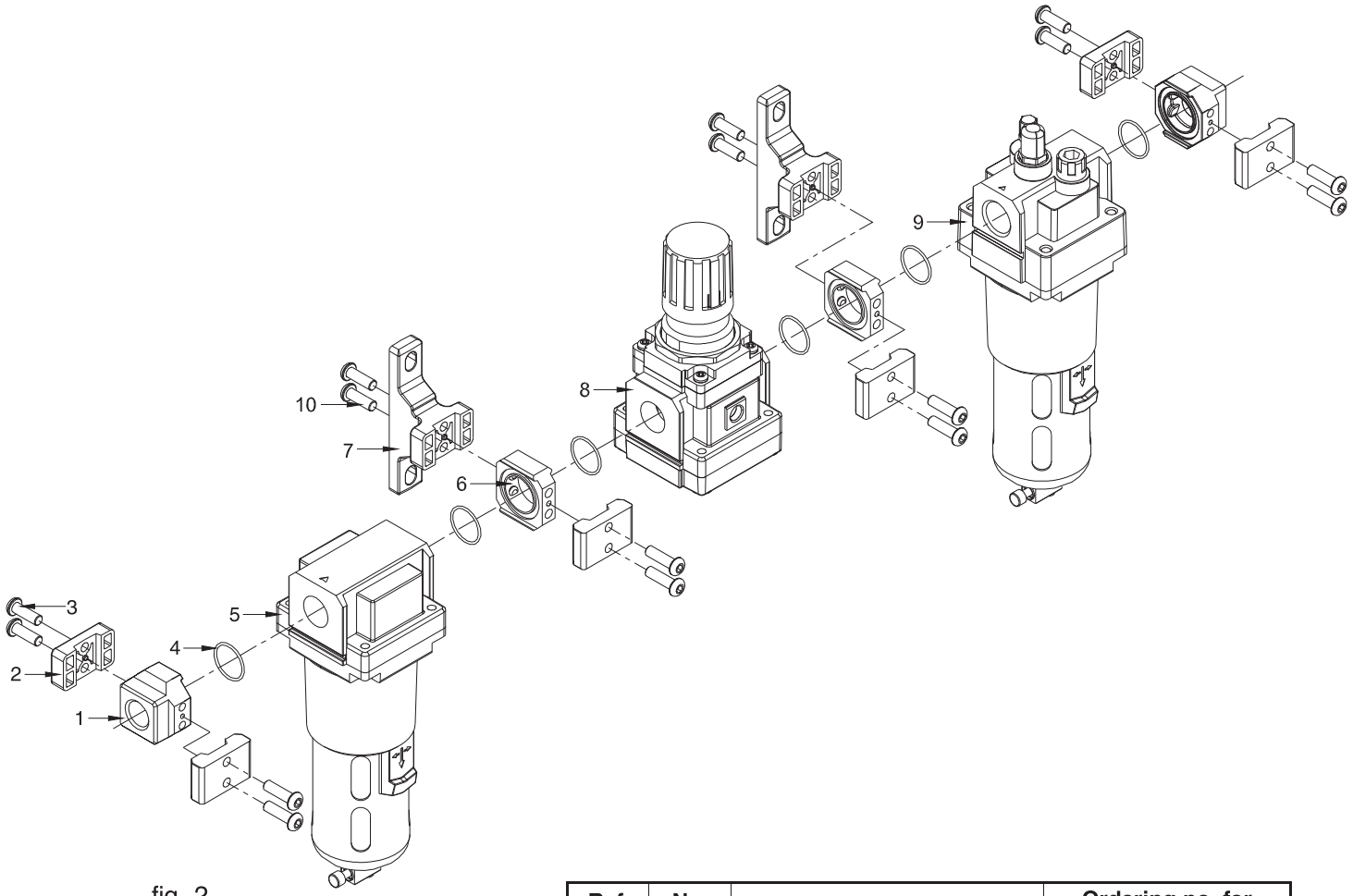

fig. 2

Ref. no.	No. off	Part name	Ordering no. for AFRLMH34 / AFRLMH1
1	2	Piping adaptor	-
2	6	Bracket	-
3	12	Socket button head screw	-
4	6	'O' ring	650107
5	1	Filter assembly	-
6	2	Spacer	-
7	2	Wall mounting bracket	-
8	1	Regulator assembly	-
9	1	Lubricator assembly	-
10	4	Socket button head screw	-

Pour l'information en français, visitez notre site Web : www.jetequipment.com/fr/