Installation / Operating / Maintenance Instructions
Lubricator

Prod. No. 408847, 408849

Specifications

Model	ALH34	ALH1
Port size	3/4	1
Max. supply pressure	140 psi (10 bar)	
Installation	Vertical (as shown)	
Recommended oil	ISO VG 32 / Mobil DTE Light	
Medium	Compressed air - Filtered	
Minimum operating flow LPM / CFM	50 (1.75)	50 (1.75)
Ambient / media temperature	5° - 60° C (41° - 140° F)	
Bowl material	Polycarbonate	

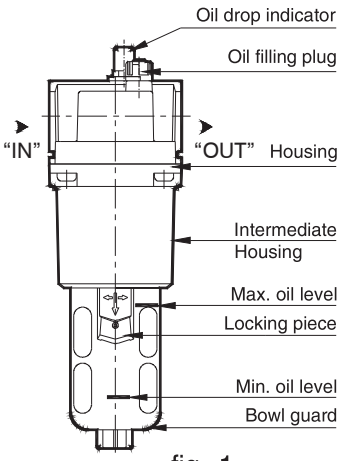

fig. 1

Important

Since this equipment is used in compressed air line, proper precautions are to be taken for safety.

Installation Instructions

1. Install in a clean / acid free environment.
2. Before installation of the unit, check whether the unit is as per the specification - especially the port size and the corresponding fittings to be used on the unit.
3. Flush the piping for dirt, dust, rust and other foreign particles.
4. The arrow mark ▶ on the top of the housing indicates the flow direction, Inlet ▶ Outlet (If the unit is connected in the reverse direction the unit will not function properly)
5. Use proper thread seals for (R) taper thread nipple, or face washer for (G) parallel thread nipple.
6. Tighten the piping / nipples to the housing ports using proper tools. Do not over torque when tightening.
7. When using (G) parallel thread nipples, check the length of the thread.

Thread Size	Tightening torque, Lb / in (Nm)	Length (L) of thread
G3/4	300 - 354 (34 - 40)	15mm max
G1	398 - 460 (45 - 52)	18mm max

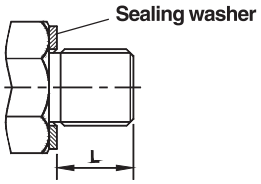

Length of G parallel thread

Operating Instructions

OIL FILLING : Remove the oil filling plug assembly (2). Pour the oil (Recommended oil ISO VG 32 / Servo system 32) in to the lubricator.

OIL FLOW ADJUSTMENT : Turn the knob (3.1.1) to adjust the oil drops to your requirement, clockwise to decrease and counter clockwise to increase the oil flow.

Maintenance Instructions

a. Before dismantling the unit, exhaust the air in the line completely.

b. To clean the Lubricator :

Removing the bowl guard (17.3) : Lift the bowl guard (17.3) upwards, pull down the locking piece (17.3.1), turn the bowl guard (17.3) by 45° and pull down.

Dismantle the components and clean all the components in kerosene and blow with compressed air. Clean the bowl only with soap water or neutral detergent. Do not use thinner, kerosene, petrol, synthetic oil, trichloroethylene or other aromatic hydrocarbons.

(Polycarbonate bowl may get damaged and possibly fail if exposed to these solvents)

c. Check for damages in the 'O' rings and other parts. Replace if needed (or) clean and reassemble.

d. For assembly of the unit : apply NLGI Grade 2 grease on the 'O' rings and on the surface of the housing where the 'O' ring enters the housing. Reassemble all the components.

Assembling the bowl guard : Position the projected lug portion of the bowl guard to the corresponding slot in the housing. Push the bowl guard fully. Turn the bowl guard 45° till the locking piece enters into the housing slot fully.

Assembly / Spare Parts List

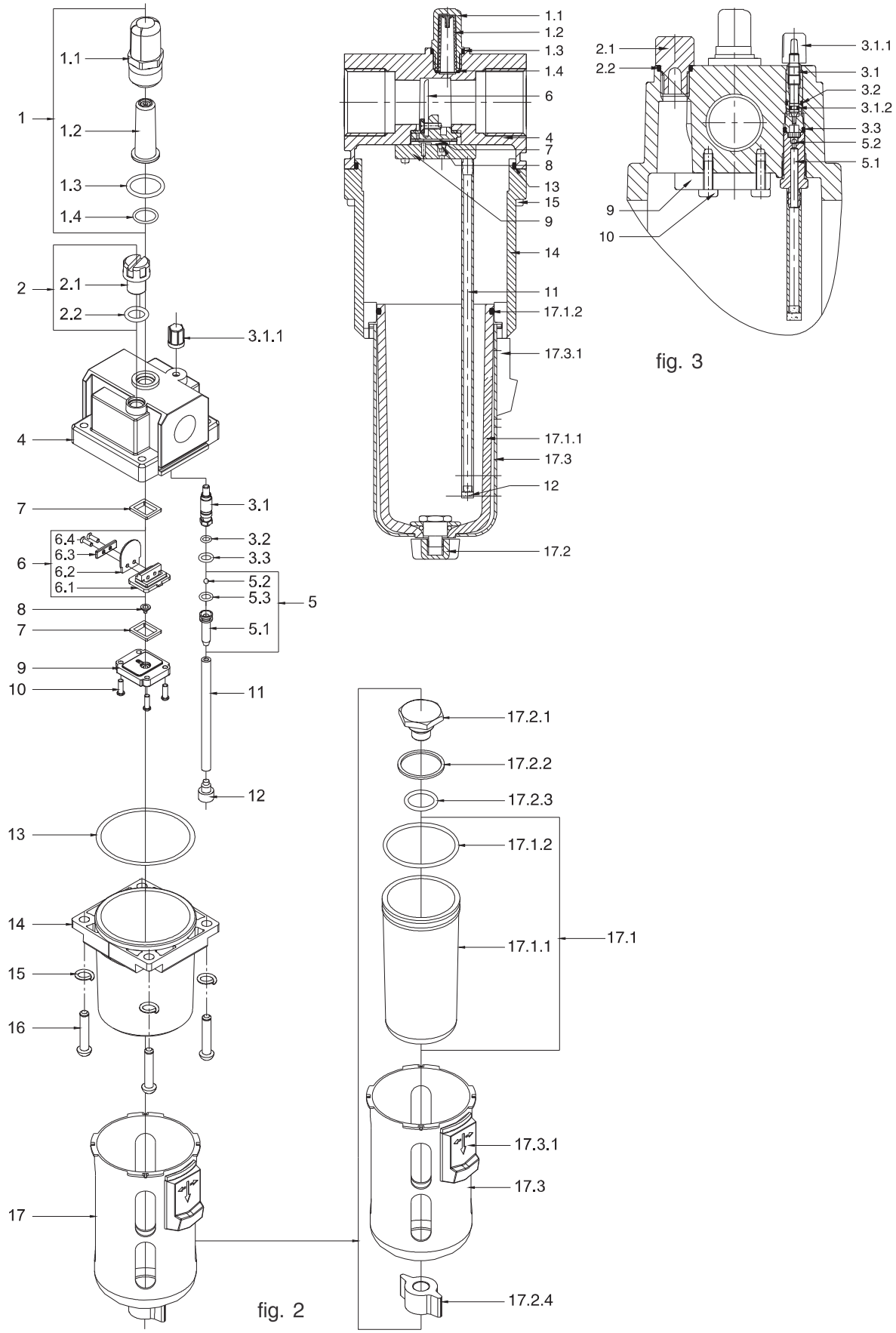

fig. 2

fig. 3

Spare Parts List
Lubricator

Ref. No.	No. off.	Part name	Ordering No. for ALH34 / ALH1
1	1	Sight dome assembly	LA2402
1.1	1	Oil drop indicator	732001
1.2	1	Oil drop controller	732002
1.3	1	'O' ring	650010
1.4	1	'O' ring	651004
2	1	Oil filling plug assembly	LA2407
2.1	1	Oil filling plug*	-
2.2	1	'O' ring	650009
3	1	Needle assembly	SC2404
3.1	1	Needle housing assembly	-
3.1.1	1	Knob	-
3.1.2	1	'O' ring	-
3.2	1	'O' ring	651003
3.3	1	'O' ring	650003
4	1	Housing	-
5	1	Connector assembly	LA2420
5.1	1	Connector	-
5.2	1	Ball	-
5.3	1	Washer	-
6	1	Jet deflector assembly	LA2419
6.1	1	Bottom plate	-
6.2	1	Jet deflector	-
6.3	1	Plate	-
6.4	1	Slotted counter sunk head screw	-
7	2	Washer	838081
8	1	Valve seat	772001
9	1	Deflector retainer	532006
10	4	Combination head screw	-
11	1	Suction tube	-
12	1	Oil Filter	582005
13	1	'O' ring	651119
14	1	Intermediate housing	-
15	4	Spring washer	-
16	4	Socket button head cap screw	-
17	1	Bowl & Bowl guard assembly	-
17.1	1	Bowl assembly	LA2002
17.1.1	1	Bowl	732004
17.1.2	1	'O' ring	650110
17.2	1	Gland plug assembly	LA2410
17.2.1	1	Gland plug	-
17.2.2	1	Sealing washer	-
17.2.3	1	'O' ring	650102
17.2.4	1	Gland nut	-
17.3	1	Bowl guard	-
17.3.1	1	Locking piece	-

Denotes for ordering items. For example, **Bowl assembly (17.1)** will be supplied as kit, consisting of Bowl (17.1.1) and 'O' ring (17.1.2) accordingly.

Trouble shooting

TROUBLE	CAUSE	SOLUTION
1. Oil does not flow	1. Wrong port connection	1. Change the port connection
	2. Air flow rate insufficient	2. Refer specification and select the model
	3. Oil below “minimum oil level”	3. Pour oil
	4. Oil adjusting screw in closed position	4. Adjust oil drops to your requirement
	5. Oil filter (12) clogged	5. Clean and reassemble
	6. “Oil path” clogged	6. Dismantle the unit. Clean the “Oil path” with air and reassemble
2. Oil leak through Needle assembly (3)	‘O’ ring (3.1.2) damaged	Replace needle assembly (3)
3. Oil leak through Housing & Needle assembly	‘O’ ring (3.2) damaged	Replace ‘O’ ring (3.2)
4. Flow of oil not adjustable	‘O’ ring (3.3) damaged	Replace ‘O’ ring (3.3)
5. Oil drops not seen through dome (1.1)	‘O’ ring (1.4) damaged	Replace ‘O’ ring (1.4)
6. Air leak through sight dome (1.1)	‘O’ ring (1.3) damaged	Replace ‘O’ ring (1.3)
7. Air leak at Intermediate Housing (14) and Bowl guard (17.3)	‘O’ ring (13) damaged	Replace ‘O’ ring (13)
8. Air leak at Gland plug (17.2.1) and Bowl guard	‘O’ ring (17.2.3) damaged	Replace ‘O’ ring (17.2.3)
9. Air leak at oil filling plug (2.1)	‘O’ ring (2.2) damaged	Replace ‘O’ ring (2.2)

How to order spare parts:

Mention the spare parts and model numbers as given in the tables.
Example: ‘O’ ring (15.2.3) – 650102 for ALH34

Subject to change

Pour l'information en français, visitez notre site Web : www.jetequipment.com/fr/