Installation / Operating / Maintenance Instructions
Lubricator

Prod. No. 408831, 408833, 408836, 408842

Specifications

Model	ALM18 ALM14	ALI38	ALS12
Port size	1/8, 1/4, 3/8, 1/2		
Max. supply pressure	140 psi (10 bar)		
Installation	Vertical (as shown)		
Recommended oil	ISO VG 32 / Mobil DTE Light		
Medium	Compressed air - Filtered		
Minimum operating flow LPM / CFM	12 (0.42)	40 (1.41)	45 (1.6)
Ambient / media temperature	5° - 60° C (41° - 140° F)		
Bowl material	Polycarbonate		

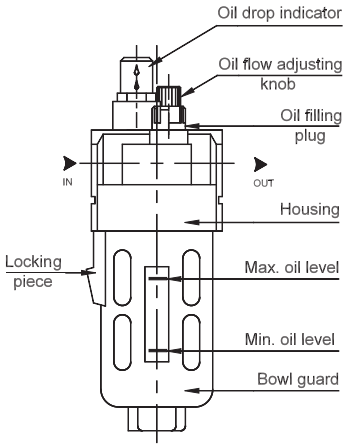

fig. 1

Important

Since this equipment is used in compressed air line, proper precautions are to be taken for safety.

Installation Instructions

1. Install in a clean / acid free environment.
2. Before installation of the unit, check whether the unit is as per the specification - especially the port size and the corresponding fittings to be used on the unit.
3. Flush the piping for dirt, dust, rust and other foreign particles.
4. The arrow mark ▶ on the top of the housing indicates the flow direction, Inlet ▶ Outlet (If the unit is connected in the reverse direction the unit will not function properly)
5. Use proper thread seals for (R) taper thread nipple , or face washer for (G) parallel thread nipple.
6. Tighten the piping / nipples to the housing ports using proper tools. Do not over torque when tightening.
7. When using (G) parallel thread nipples, check the length of the thread.

Thread Size	Tightening torque, Lb / in (Nm)	Length (L) of thread
G1/4	106 - 125 (12 - 14)	8mm Max.
G3/8	195 - 215 (22 - 24)	9mm Max.
G1/2	250 - 270 (28 - 30)	12mm Max

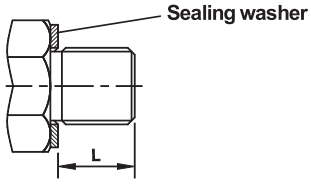

Length of G parallel thread

Operating Instructions

OIL FILLING: Remove the oil filling plug assembly (2). Pour the oil (Recommended oil ISO VG 32 / Servo system 32) into the lubricator.

OIL FLOW ADJUSTMENT: Turn the needle knob (3.1.1) to adjust the oil drops as required, clockwise to decrease and counter clockwise to increase the flow.

Maintenance Instructions

a. Before dismantling the unit, exhaust the air in the line completely.

b. To clean the Lubricator:

Removing the bowl guard (12.3): **(For models ALI38 and ALS12)** Lift the bowl guard (12.3) upwards, pull down the locking piece (12.3.1), turn the bowl guard (12.3) 45° and pull down.
(For models ALM 18 and ALM14) unscrew the threaded bowl guard (12.3).

Dismantle and clean all the components in kerosene and blow with compressed air. Clean the bowl only with soap water or neutral detergent. Do not use thinner, kerosene, petrol, synthetic oil, trichloroethylene or other aromatic hydrocarbons. (Polycarbonate bowl may get damaged and possibly fail if exposed to these solvents.)

c. Check for damages in the 'O' rings and other parts. Replace if needed (or) clean and reassemble.

d. For assembly of the unit: apply NLGI Grade 2 grease on the 'O' rings and on the surface of the housing where the 'O' ring enters the housing. Reassemble all the components.

Assembling the bowl guard: **(For models ALI38 and ALS12)** position the projected lug portion of the bowl guard to the corresponding slot in the housing. Push the bowl guard fully. Turn the bowl guard 45° until the locking piece enters into the housing slot fully.
(For models ALM 18 and ALM14) screw in the threaded bowl guard.

Assembly / Spare Parts List

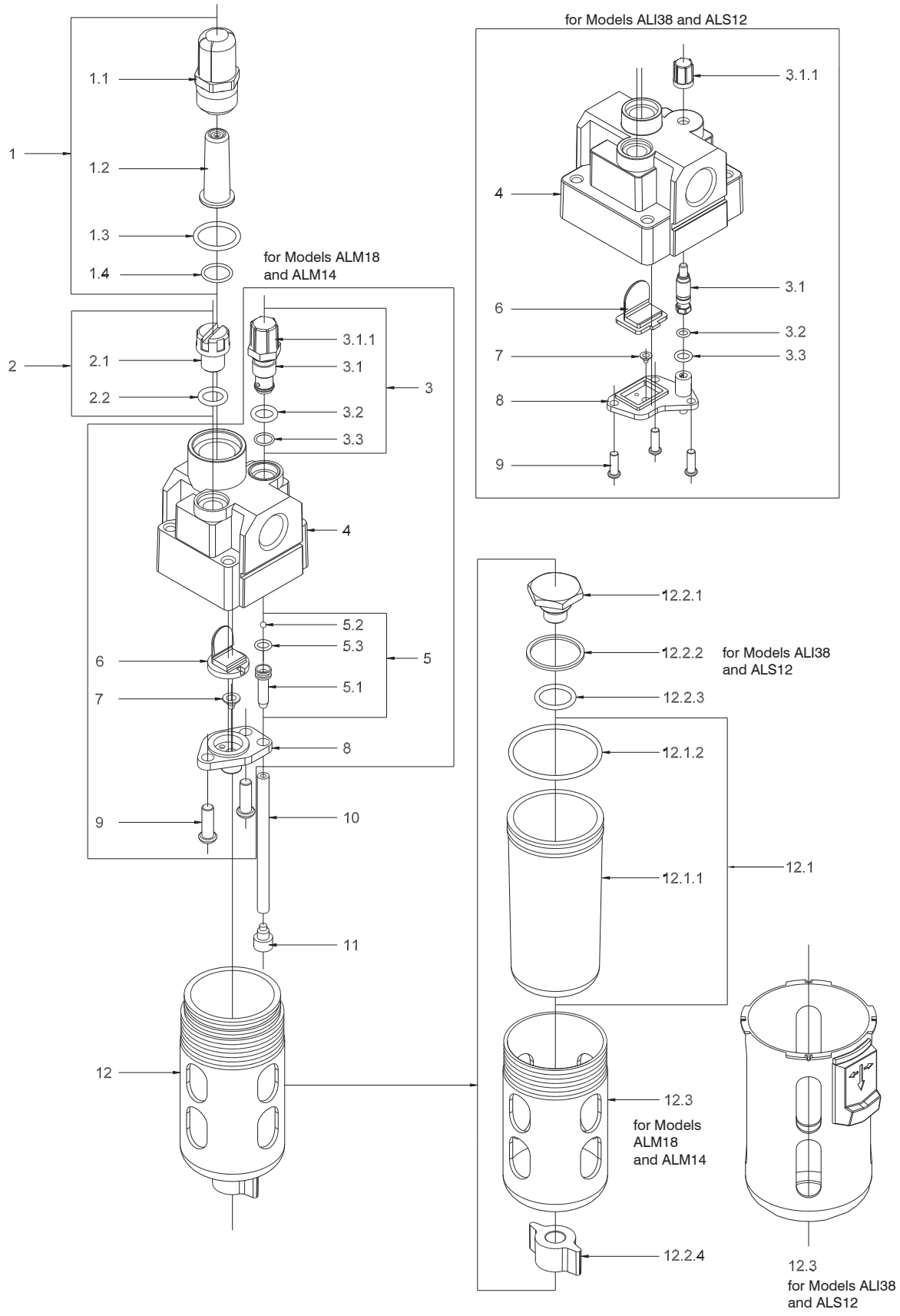

fig. 2

Spare Parts List
Lubricator

Ref. No.	No. off.	Part name	Ordering No. for		
			ALM18 / ALM14	ARI38	ALS12
1	1	Sight dome assembly	LA2402	LA2402	LA2402
1.1	1	Oil drop indicator	732001	732001	732001
1.2	1	Oil drop controller	732002	732002	732002
1.3	1	'O'ring	650010	650010	650010
1.4	1	'O'ring	651004	651004	651004
2	1	Oil filling plug assembly	LA2405	LA2406	LA2407
2.1	1	Oil filling plug*	-	-	-
2.2	1	'O'ring	650004	650006	650009
3	1	Needle assembly	SC2400	SC2401	SC2401
3.1	1	Needle housing assembly	-	-	-
3.1.1	1	Knob	-	-	-
3.1.2	1	'O'ring	-	-	-
3.2	1	'O'ring	650003	651003	651003
3.3	1	'O'ring	651003	650003	650003
4	1	Housing	-	-	-
5	1	Connector assembly	LA2400	NIL	NIL
5.1	1	Connector	-	NIL	NIL
5.2	1	Ball	-	NIL	NIL
5.3	1	'O'ring	-	NIL	NIL
6	1	Jet deflector	772000	772002	772003
7	1	Valve seat	772001	772001	772001
8	1	Deflector retainer assembly	-	LA2403	LA2404
9	2/3	Philip head screw	-	-	-
10	1	Suction tube	-	-	-
11	1	Oil filter	-	-	-
12	1	Bowl & Bowl guard assembly	-	-	-
12.1	1	Bowl assembly	LA2000	LA2001	LA2002
12.1.1	1	Bowl	-	-	-
12.1.2	1	'O'ring	650015	650108	650110
12.2	1	Gland plug assembly	LA2408	LA2409	LA2410
12.2.1	1	Gland plug	-	-	-
12.2.2	1	Sealing washer	NIL	-	-
12.2.3	1	'O'ring	650008	650102	650102
12.2.4	1	Gland nut	-	-	-
12.3	1	Bowl guard	-	-	-
12.3.1	1	Locking piece	-	-	-

Denotes for ordering items. For example, **Bowl assembly (12.1)** will be supplied as kit, consisting of Bowl (12.1.1) and 'O' ring (12.1.2) accordingly.

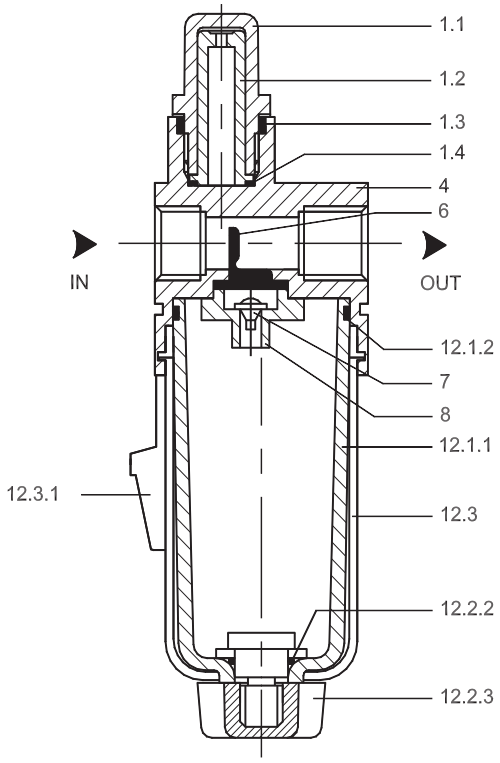

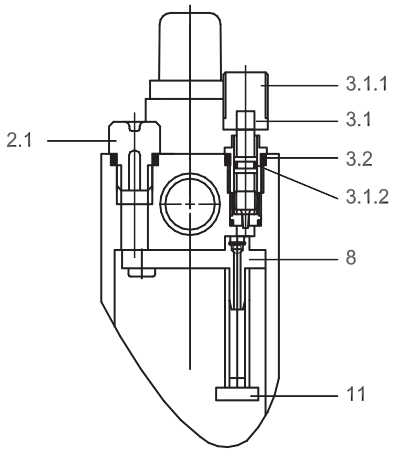

fig. 3

Trouble shooting

Trouble	Cause	Solution
1. Oil does not flow	1. Wrong port connection. 2. Air flow rate insufficient. 3. Oil below "minimum oil level". 4. Oil adjusting screw in closed position 5. Oil filter (11) clogged. 6. "Oil path" clogged.	1. Change the port connection. 2. Refer to specification and select the model. 3. Pour oil. 4. Adjust oil drops to your requirement. 5. Clean and reassemble. 6. Dismantle the unit. Clean the "Oil path". with air and reassemble.
2. Oil leak through Needle assembly (3)	'O'ring (3.1.2) damaged	Replace Needle assy (3)
3. Oil leak through Housing & Needle assy	'O'ring (3.2) damaged	Replace 'O'ring (3.2)
4. Flow of oil not adjustable.	'O'ring (3.3) damaged	Replace 'O'ring (3.3)
5. Air bubbles along with oil drop.	'O'ring (5.3) damaged	Replace 'O'ring (5.3)
6. Oil drops not seen through dome (1.1)	'O'ring (1.4) damaged	Replace 'O'ring (1.4)
7. Air leak through sight dome (1.1)	'O'ring (1.3) damaged	Replace 'O'ring (1.3)
8. Air leak at Housing (4) and bowl guard (12)	'O'ring (12.1.2) damaged	Replace 'O'ring (12.1.2)
9. Air leak at Gland plug (12.2.1) and bowl guard	'O'ring (12.2.3) damaged	Replace 'O'ring (12.2.3)
10. Air leak at oil filling plug (2.1)	'O'ring (2.2) damaged	Replace 'O'ring (2.2)

How to order spare parts:

Mention the spare parts and model numbers as given in the tables.
Example: 'O' ring (15.2.3) – 650102 for ALS12

Subject to change

Pour l'information en français, visitez notre site Web : www.jetequipment.com/fr/